JONES&SHIPMAN 10

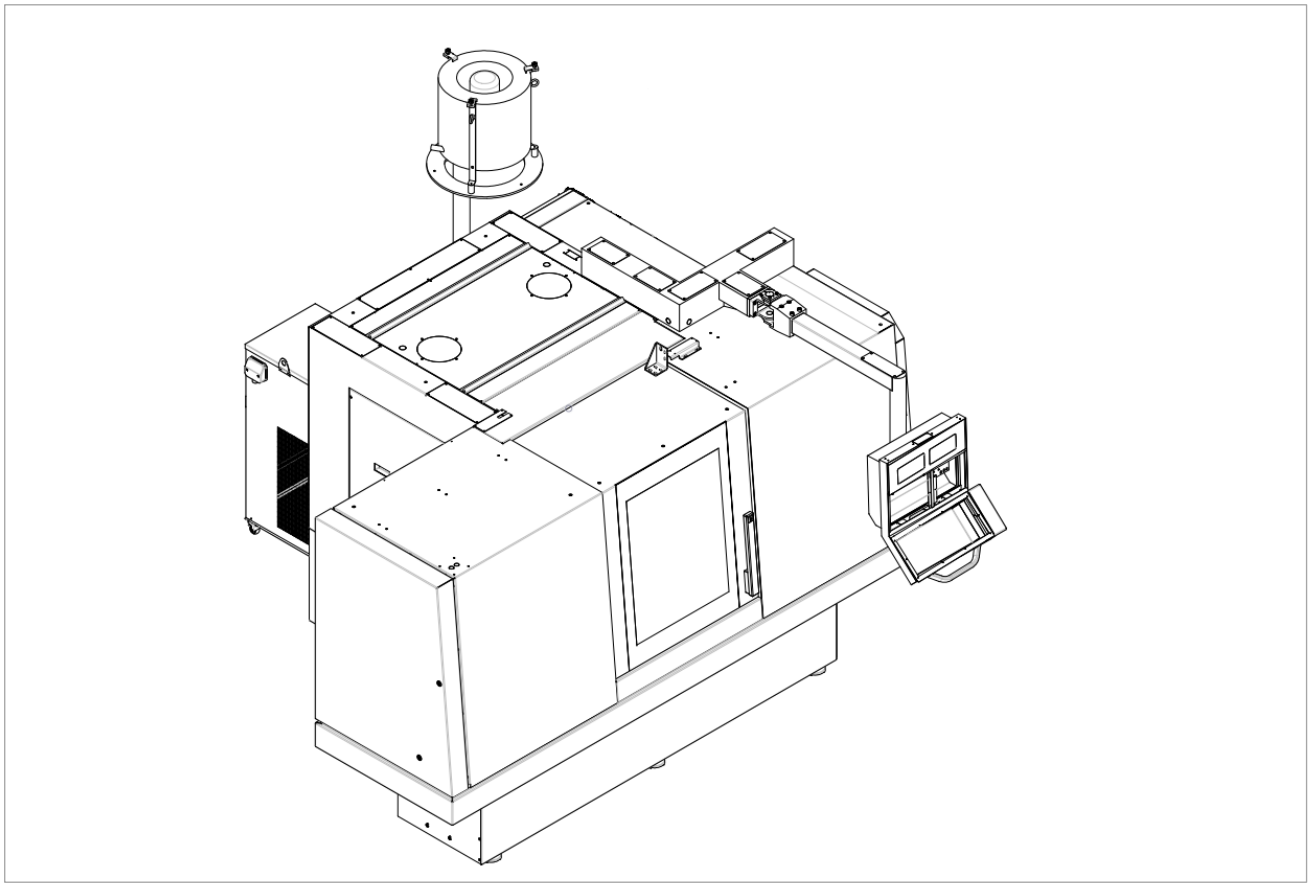

USER MANUAL

CNC CYLINDRICAL GRINDING MACHINE 650/1000 E/A

SAFETY, REPAIR AND MAINTENANCE

HARDINGE

HGA001189604CN-01
Version 1.4
Date: 2022/03
HARDINGE Asia Ltd

Imprint

The illustrations in this manual do not always correspond to the original. No legal claims can be derived from information provided incorrectly. Subject to design modifications. HARDINGE is not liable for any errors in this documentation.

Keep the instruction manual for subsequent use.

Hardinge Asia Limited
No. 1388, Kangqiao East Road, Pudong New Area, Shanghai
http://www.hardinge.com.cn

HGA001189604CN-01
Version : 1.4
Date : 2022/03

Table of contents

1. General

This manual has been issued to give details of the function and methods of this grinding machine so as to ensure safe, efficient operation. The procedures for installation, operation and routine maintenance, are all described to allow the machine to be used to its maximum capability.
Safe use and maintenance of the machine is emphasised and should be adopted as a safety code for machine operation and service. The machine has been designed and built for precision grinding; therefore it is in the operator's own interest to use the machine in accordance with the instructions detailed within the manual to ensure trouble free running and to promote optimum grinding results. This machine incorporates safety design features, safety devices, guarding arrangements and is supplied with such information as to its safe operation and use, that we believe, so far as is reasonably practicable, it is safe and in compliance with Standard document GB-T 24384-2009 External cylindrical grinding machines-Safeguarding specifications.

Important
It is essential that this manual is thoroughly read and understood before attempting to operate this machine.

1.1 Identification of graphical symbols

1.1.1 Safety signs

The severity of the potential risk is indicated by a signal word and a symbol.

	Warning 1) Indicates a potentially hazardous situation, failure to follow the instructions will cause serious injury or death.
	Warning 1) Risk of injury due to electric shock.
	Warning 1) Risk of burns due to a hot surface.
	Caution 1) Indicates a potentially hazardous situation, failure to follow the instructions could cause minor or moderate injuries, or damage to the machine.

	Caution 1) Risk that may be caused by flammable materials.。
	Caution 1) Risk that may be caused by explosive atmosphere.
	Caution 1) Risk of toxic material or corrosive substance.
	Caution 1) Risk of slipping.
	Caution 1) Risk of hand injury.
	Caution Risk of injury caused by rotating parts of the equipment.
	Caution 1) Risk of injury due to the machine starting up unexpectedly.
	Caution 1) Danger due to objects being ejected, caused by high mechanical energy.
	Note Highlight important information.
	Important Indicate instructions for use and other useful information.
	Disconnect before carrying out maintenance or repair Disconnecting the machine or equipment before carrying out maintenance or repair.

	Prohibit entry without permission.
	Must wear protective clothes
	Must wear non-slip protective gloves
	Must wear non-slip boots / work shoes
	Must wear protective mask
	Must wear safety helmet
	Must wear protective goggles
	Must wear dustproof mask
	Must be disabled / identified. Application: The power must be cut off and marked to prevent restarting to ensure safe operation. Operation: Cut off the power and mark.
	Workplace Hazardous Material Information System (WHMIS)
	Oily rags. Application: Mark the bins containing oily rags. Operation: Put the oily rags in to the bin only. Oily substances or textiles present a great fire hazard.

	Collect waste oil. Application: Identify waste oil containers. Operation: If it is waste oil only, pour it into the waste oil container. (Mixture cannot be poured in)
	No smoking, fire and open flame. There is a danger of fire and explosion.
	Do not eat or drink at work. Eat only at designated locations within the operating company.
	Hands must be washed Application: Prevent harmful substances from entering the digestive system through the hands and mouth, which may be harmful to health.
	Use barrier cream. Application: Protecting the skin with barrier cream during breaks and after work, according to the operating instructions and the appropriate skin protection plan.

1.1.2 Symbols for operation.

➢ Identify an operational instruction.

Ð Identify the result of an operation.

→ Identify a reference

	Visual inspection
	The tool needed. Here is a hex wrench with T-handle.
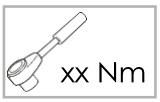	Tightening Torque of XX Nm
	Clean with a rag
	Waiting time or time required
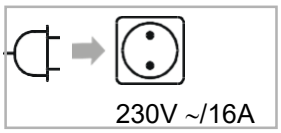	Insert the plug into the socket (230V~/16A)
	Do not clean with jet water
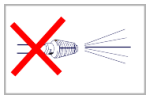	Do not use a steam ejector / high pressure cleaner for cleaning
	Do not clean with compressed air

1.2 Description

1.2.1 Designated Use

Please use it for specific purposes

- Grinding of a rotationally symmetrical surface.
- The material to be processed should be steel material.
- The workpiece to be machined should be clamped using the workpiece. clamping device. The allowed workpiece clamping device.
- The workhead for centering clamped spindle and the workhead for spindle with hollow shaft and mechanical chuck.
- Only use the tool drive to rotate the workpiece. The drive must provide both forced and non-forced drives.
- Grinding tool: Grinding wheel with bonded abrasive.
- The permitted peripheral speed of the grinding wheel must not be exceeded, it should be in accordance with the technical requirements specified on the label of grinding wheel guard.
- The grinding wheel in the machine tool should be trimmed using a fixed, oscillating or rotary dressing tool.
- Flammable coolant (grinding oil) can only be used if the appropriate information sign is placed on the machine and the grinding spray and fire suppression system that has been monitored via the electrical interface is connected to the machine.
- When using grinding oils, ensure that the flash point of such oils is not less than 130 °C.
- This machine is based on a modular design concept.

Not in accordance with the designated use includes:

Warning
If the machine is used abnormally or incorrectly, or if the machine is used for other purposes than specified, there is a risk of significant damage to the machine and can result in personal injury or even further damage to property.

- Grinding the workpiece or chamfering and trimming on the rotating grinding wheel by hand;
- Correcting and balancing the rotating grinding wheel by holding the dressing tool or balance tool by hand;
- Any modification of the protective device and the safety interlock;
- Grinding light metals and alloys with an aluminium content of 70 or more, or a magnesium content of 80, unless the machine tool is equipped with the appropriate option.
- There is a danger of increasing the fire. For example, when performing wet grinding, the flow controller must be used to monitor the fluid conditioning system.
- Use flammable coolant (grinding oil) only when the machine is equipped with the required additional equipment and marking.
- It must be absolutely ensured that the workpiece weight does not exceed the maximum weight/maximum load torque
- (when grinding is running) and in all cases the restrictions
- on the chuck used must be considered.

- It is strictly forbidden to make any modifications to the machine tool
- Failure to comply with the precautions, safety precautions, or operation and maintenance requirements in the manual.
- Failure to comply with generally accepted industrial health standards.

1.2.2 Liability and warranty

No liability or warranty is assumed if:

- Failure to follow the instructions and precautions in the operation manual.
- The equipment was not used as specified.
- The use of NC programs which is not programmed by HARDINGE's processes results in failure of the equipment processes and consequent losses.
- Incorrect operation of the equipment and its accessories.
- Operate the equipment in an abnormal state.
- Improper repair and maintenance of equipment and accessories.
- Modifications and changes without written approval from the manufacturer.
- Original accessories are not used.
- Losses caused by lightning, water, fire, force majeure, war, faulty power supply voltage, poor ventilation or other reasons not responsible for the manufacturer.
- Use equipment in countries or other areas that are not developed and manufactured for it.
- T he manufacturer's warranty requirements are processed in accordance with the “sales and delivery conditions” of HARDINGE Co., Ltd.

Danger!
Risk of fatal injury due to fire and explosion!
The ignition of machining oils can cause serious burns and even death.
• A machine which is approved for the use of oil as a cooling lubricant must not be operated without a fire extinguishing system in place.
• Operation of the machine without the required ancillary equipment is not permitted.
•The fire extinguishing system must be integrated at the factory, and maintained according to the regulations of the supplier.
• Wear appropriate protective work clothing

2. Safety

This chapter is intended to explain to users the hazards and risks that may exist when using this product for the specific purpose. It also describes safety precautions and safety information which have generally applicable should be followed.
Specific safety precautions related to the operation or the corresponding situation are presented before the operational steps or before the sections describing the situation.

2.1 Principles

The objective of the safety notes is to introduce you as users to safe operation of the machine.
Anyone who is involved in installation, start-up, operation and maintenance (inspection, servicing, repair) on the machine must have read and understood the entire instruction manual.
Before carrying out any operations on the machine, please carefully study the safety notes provided with each chapter.
In addition to the notes in this instruction manual, it is also necessary to comply with the generally applicable and locally specific safety and accident prevention regulations.
Ensure that this manual is always available close to the machine.

• This machine has been manufactured and assembled in accordance with the present state of the art and is safe to operate. Particular attention has been paid to the safety of the operator and to the ergonomic lay-out of the controls.

• The individual parts and the finished machine were subjected to our Quality Assurance inspections.

• All safety and protective equipment forms part of a safety concept which has the objective of protecting everyone who works with the machine against dangers.

• In addition to this instruction manual, be sure to pay attention to the instructions of each external device. The safety instructions in these manuals must be adhered to.

2.2 General Safety Instructions

Danger!
Mechanical danger due to moving parts!
Risk of injury due to crushing, impacts, drawing in or abrasion.
•Do not operate the machine unless all safety and protective devices are attached and functioning perfectly.
• Do not open covers during operation.
• During operation, do not reach into moving parts or work in the immediate vicinity of moving parts.
• Do not make any changes to the safety and protective equipment.
• Wear appropriate protective work clothing.

Important!
The circuit-breaking procedures mentioned in the operating manual must always be observed during all jobs connected with the installation, commissioning, operation, adjustment, adaptation and maintenance of the machine. Also comply with the description of the various machine operating mode in the OPERATING MANUAL machine documentation.

Danger!
Risk of injury due to rotating grinding wheel!
Failure to work with caution can result in injuries due to friction or abrasion.
• Only operate the grinding wheel with the grinding wheel guard and contact guard in place.
• Work with particular care during set-up with the grinding wheel running.
• Do not remove protective devices from the grinding wheel and grinding wheel drive unless the machine is stationary and switched off, and the main switch has been secured to prevent inadvertent activation.
• Do not open covers during operation.
• Do not reach into moving grinding wheels during operation.
• After an EMERGENCY STOP, the grinding wheel continues to rotate for a certain period of time until it comes to a complete stop.

Caution!
Risk of injury by opening and closing the doors!
Failure to work cautiously can result in crushing injuries.
• When opening and closing the doors, make sure that no body parts or objects are in the danger zone.

Danger!
The object being thrown can cause damage!
Tools or workpieces can be ejected during operation.
• Do not open safety doors and covers during operation.
• Avoid direct proximity and contact with the casing in the scatter area.
• Before starting the machine or after a change of tool, the highest permissible rotational speed must be set on the control unit or confirmed.

Danger!
Grinding wheels can burst during operation, causing severe injuries.
• The safety recommendations for the correct use of grinding tools set down by the manufacturer of abrasives must be complied with.
• The grinding wheels must meet the relevant safety standards.
Bonded abrasive grinding tools: EN 12413
Grinding instruments with diamond or boron nitride: EN 13236
• The grinding wheels must be properly prepared before assembly.
• The permitted peripheral speed of the grinding wheel must not be exceeded.
• Before restarting the grinding spindle after a tool replacement, the rotational speed or peripheral speed set in the controller must be checked against the permissible peripheral speed and adapted if necessary.
•Close all protective equipment before switching the grinding spindle on for the first time after a tool replacement or following manipulation of its drive.
• Avoid direct proximity and contact with the casing in the scatter area.

Danger!
Risk of fatal injury due to electric shock!
Damage to the insulation or individual components represents a risk of fatal injury. Risk of fatal injury due to electric shock in case of touching live parts.
• Only have work carried out on the electrical system by electricians.
• In case of damage to the insulation, switch off the electrical power supply immediately and instigate repair.
• Before any work on the electrical system, as well as before maintenance, cleaning and repair work, de-energise the electrical system completely, secure it to prevent reactivation and check it is not live.
•The inspection and maintenance intervals must be complied with.
• Never bypass fuses or deactivate them. When renewing fuses, observe the correct ratings.
•Keep moisture away from live parts. Moisture can cause a short-circuit.
• After appropriate electrical installation or repair, the protective measures must be tested (e.g. earthing resistance).

Danger!
Risk of fatal injury due to electromagnetic radiation!
People with metallic or active medical implants (e.g. cardiac pacemakers or implanted defibrillators) are at risk of severe and even fatal injury in the vicinity of the machine.
• People with medical metallic or active implantable medical devices (AIMDs) are not allowed to remain in the vicinity of the machine.
•Do not wear watches or metallic jewellery in the vicinity of the machine.
• The supplier's documentation must be complied with.

Danger!
Risk of fatal injury due to fire and explosion!
The ignition of machining oils can cause serious burns and even death.
• A machine which is approved for the use of oil as a cooling lubricant must not be operated without a fire extinguishing system in place.
• Operation of the machine without the required ancillary equipment is not permitted.
•The fire extinguishing system must be integrated at the factory, and maintained according to the regulations of the supplier.
• Wear appropriate protective work clothing.

Caution!
Risk of injury on sharp edges and pointed corners!
Sharp edges and pointed corners can cause grazes and lacerations to the skin.
• Wear protective gloves.
• Work with care in the areas around sharp-edged parts.

Caution!
Risk of injury due to hot surfaces!
Surfaces of components and servomotors within the machine cabinet can become very hot during operation. Skin contact with hot surfaces causes severe burns.
• Wear the appropriate protective work clothing and protective gloves for all work in the vicinity of hot surfaces.
• Before any work, make sure that all surfaces have cooled down to ambient temperature.

Caution!
Risk of injury due to released vapours, dust and abrasion!
Vapours, dust and abrasion can be released during the working process and cause serious injuries if inhaled.
• Do not operate the machine unless the grinding dust extraction system is functioning.

Caution!
Risk of injury through contact with coolant-lubricant!
Coolant-lubricants contain toxic constituents. Contact with coolant-lubricants can cause severe poisoning, allergies, skin irritations and eye injury.
• Comply with all safety instructions in the supplier documentation.
•Comply with the safety data sheet from the manufacturer.
• When working with coolant-lubricants, always wear protective work clothing as per the local regulations and laws, and perform the skin protection plan. Follow the notes on personal protective equipment contained in the safety data sheet from the manufacturer.

Danger!
Risk of fatal injury due to fluids or compressed air spraying out under high pressure!
Defective lines or components can allow liquid or air to spray out under high pressure. The jet of fluid or air can cause severe and even fatal injuries.
• Never intercept the jet of fluid or air with parts of your body or other objects. Keep people away from the danger zone. In case of inadvertent contact with the jet of fluid, initiate first-aid measures and seek medical assistance immediately.
• Trigger the EMERGENCY STOP.
• Immediately have defective components or hoses repaired or renewed.
•Absorb and dispose of leaked-out fluids according to the environmental regulations of the specific country.
• Comply with the suppliers' documentation.
• Comply with local safety regulations regarding hydraulic hoses.

Caution!
Danger due to noise!
Noise can cause loss of hearing as well as other physiological impairments.
• Wear hearing protection as required.

Danger!
Flying objects and bursting grinding wheels can fly out through weak points and can cause serious injuries or even death.
• The machine is allowed to be operated only if all safety and protective equipment is undamaged, correctly installed, and functioning properly.
•Damaged safety and protective equipment must be replaced.

Warning!
Risk of injury due to mental strain or boredom!
Increasing experience and levels of safety can provide ground for complacency at work, thereby increasing the risk of accidents.
• Never become complacent! This concerns your safety and the safety of your colleagues.
• Wear appropriate protective work clothing.

Warning!
This product can expose you to chemicals including one or more listed chemicals which are known to cause cancer and birth defects or other reproductive harm. This warning also includes the future delivery of spare parts for this product.

2.3 Conduct in case of fire and accident

Preventative measures

- Always be prepared for accidents and fire.
- Keep first-aid equipment (first-aid kit, fire blankets, etc.) close at hand.
- Make sure that the fire extinguishers which are appropriate for the fire category are in working order, and are close at hand.
- Make sure personnel are familiar with the accident reporting facilities, first-aid and rescue equipment.
- Keep access ways clear for rescue vehicles.

Measures in case of accidents

- Immediately trigger an EMERGENCY OFF using the EMERGENCY OFF button.
- Move people away from the danger zone.
- Initiate first-aid measures.
- Notify the rescue services.
- Inform the person in charge at the specific location.
-

Measures in case of fire

- Immediately trigger an EMERGENCY OFF using the EMERGENCY OFF button.

Before starting to extinguish a fire manually ensure the following:

- The dust extraction system is switched off.
- The coolant and airlock supply are switched off.

- The machine is in a secure state.

Manual fire-fighting should only be carried out by the company's own fire brigade or by specially trained personnel. It should only be performed if any danger can be ruled out. It is therefore advisable to instruct staff in the particular danger associated with extinguishing machine fires and extinguishing measures.

Warning!
Risk of fatal injury if extinguishing burning oil with water!
Such a fire will spread explosively if it is extinguished with water.
• Never use water to extinguish oil fires.
• Always use the appropriate fire extinguisher for the fire category.

The danger of sudden ignition or reignition of as yet unburned coolant-lubricant when the machine door is opened cannot be ruled out. To avoid the risk of clothes being ignited by escaping flames, no oil-soaked or oil-smeared clothing should be worn. Even low-flammable textiles can burn if they are soaked in flammable liquids (the wick effect).

Metal machine components and surfaces in particular should not be touched after a fire, since, in addition to the danger of burns, the risk from live parts (electric shock caused by charred cables) cannot be ruled out.

Warning!
Risk of fatal injury due to electric shock!
After a fire, machine parts and surfaces may be live because of charred cables. Directly touching live parts can cause extremely severe and even fatal injuries .
• In particular, do not touch metal machine components or surfaces after a fire.

3. Machine description

This part of the documentation describes the components of the machine as well as their functions.

Important!
For the convenience of explanation, each component is described in detail in this chapter, but it does not mean that all these components are configured on your machine tool. The actual configuration of the machine tool depend on the full order specification.

3.1 General characteristics of the machine

3.1.1 Power supply

Standard 3-phase A.C. supply	380v 3ph 50Hz
Control circuit voltage	220vAC/24vDC
Frequency	50/60 Hz
Input voltage deviation range	+/- 10%
Full loading power (main engine)	36 KVA

3.1.2 Air services

Input Pressure	5~6 bar
Required Flow	40-50 l/min
Air Supply Quality to BS	ISO 8573-1:2001
Lubricating oil	Shell tonna S3 M32

3.1.3 Ambient temperature

Maximum operating temperature	40°C
Minimum operating temperature	5°C
Maximum allowable humidity	80% no condensation

3.1.4 Colour

Standard color of machine cover	RAL 7035 light gray
Standard color of machine base	RAL7012 dark gray

3.1.5 Weight and Dimension

Machine footprint - Model 650	3063 x 2288mm
Machine footprint - Model 650	3658 x 2288mm
Height	1821 mm
Machine tool net weight - Model 650	6500Kg
Machine tool net weight - Model 1000	6850Kg

3.2 Technical data

3.2.1 Machine Specification

General		
Maximum length between centres		650/1000mm
Center height		200mm
Maximum workpiece weight between centres		100kg
Maximum diameter of the workpiece		380mm
Wheelslide(X axis)		
Total infeed		350mm
Maximum traverse speed		10m/min
Maximum programmable diametrical infeed rate per min		6000mm/min
Minimum programmable increment Ø, CNC models		0.0001mm
Electronic Handwheel increments, CNC models		0.0001/0.001/0.01/0.1mm
Tableslide (Z Axis)		
Maximum stroke length		820/1150mm
Maximum traverse speed		12m/min
Minimum programmable increment, CNC models		0.0001mm
Electronic Handwheel increments, CNC models		0.0001/0.001/0.01/0.1mm
Straight forward wheelhead, fixed base (Type E)		
	Diameter maximum	500mm
Grinding wheel	Width	80mm（150mm Option）
	Bore	203.2mm
Mounting cone		1:7.5 Ø 72 mm
Wheel speed		63m/s
Motor Power		11/15kw
Oblique forward wheelhead, fixed base (Type A)		
	Diameter maximum	500mm
Grinding wheel	Width	80mm
	Bore	203.2mm
Mounting cone		1:7.5 Ø 72 mm
Wheel speed		63m/s
Motor Power		11/15kw
Workhead		
Live spindle,fixed base (Option)		
Speed range, continuously variable, rpm		1-600rpm
Spindle nose		A2-5
Spindle femal taper		MT5
Output torque, (continuous rating)		33Nm
Motor Power		1.8kw

Live & dead spindle, fixed base (Option)	
Speed range, continuously variable, rpm	1-600rpm
Spindle	A2-6
Output torque, (continuous rating)	33Nm
Motor Power	1.8kw
Taper Control tailstock (Option)	
Poppet diameter	50mm
Poppet taper	MT4
Centre travel	50mm
Poppet pressure, adjustable	500N
Maximum adjustment on diameter	±0.1mm
Smallest diametrical graduation	0.0005mm

3.3 General description

3.3.1 Machine parts

The main elements of the machine tool are as follows:

(1) Mist collector
(2) Operating panel
(3) Grinding fluid cooling system
(4) Machine bed
(5) Machine cover and sliding door
(6) Pneumatic unit
(7) Electrical cabinet
(8) Tailstock
(9) Table (Z axis)
(10) Wheelhead
(11) Workhead
(12) Wheelslide(X axis)
(13) Hydraulic power unit

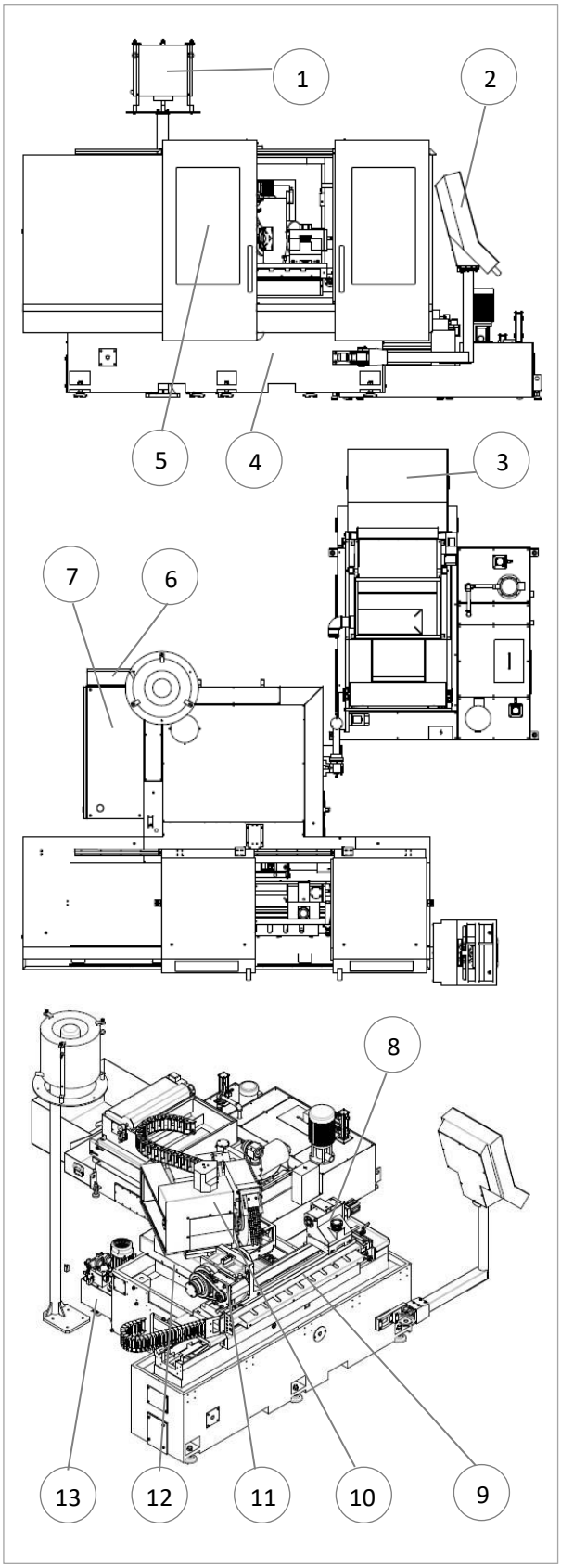

3.3.2 Machine axes

The common axes in the CNC system are:

- X : Transverse axis wheelhead
- Z : Longitudinal axis table
- B : Rotational axis wheelhead (Optional axis)

Note: Machines equipped with a B-axis are generally defined as Type U.

- C : Rotational axis workpiece spindle (Optional axis)

Note: Positioning C axis

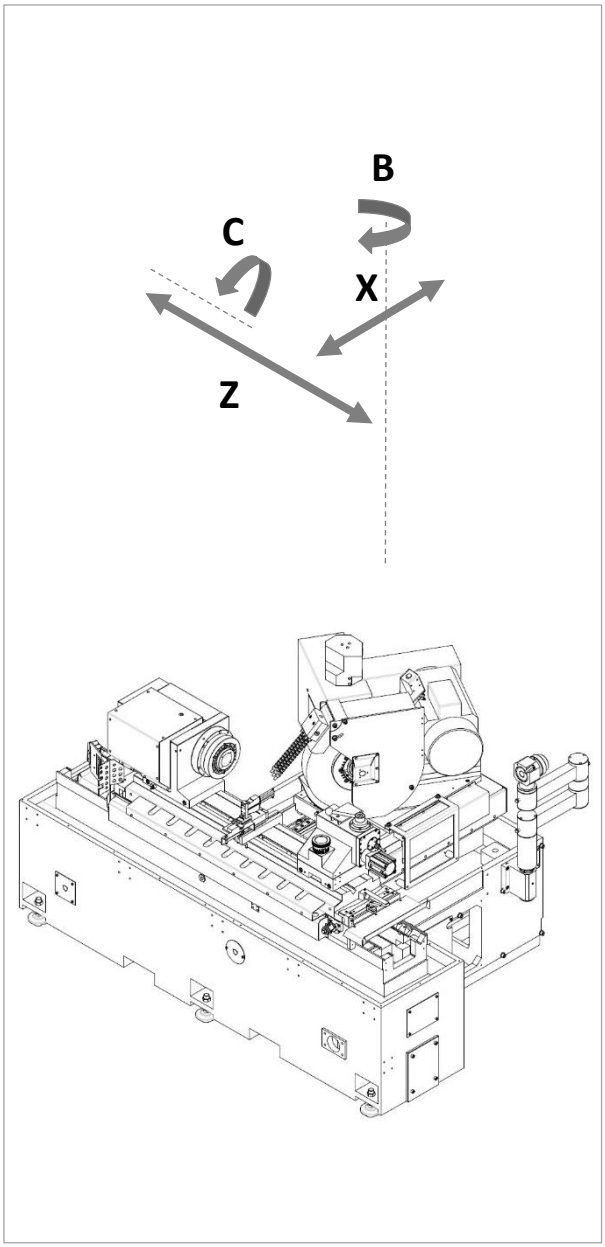

3.4 Specific description

3.4.1 Workhead

The workhead permits to hold and drive the workpieces to be machined during the grinding operation. The workpiece spindle usually has two forms: live spindle and live & dead spindle:

3.4.1.1 live & dead spindle:

The live & dead spindle: means that the spindle rotation can be separated from the center, so that the dead centre grinding can be realized, and the live spindle grinding can also be realized

(1) Workpiece spindle
(2) Drive belts
(3) Belt tensioning adjustment screw
(4) Motor adjustment screw
(5) Workhead clamping screw
(6) Workhead casting
(7) Taper fine adjustment mechanism for the workhead
(8) Drive motor
(9) Workhead airlift air intake
(10) Spindle seal air intake drive belt

Live spindle, fixed base	
Spindle speed range, continuously variable	1-1000rpm
Spindle nose	A2-5
Spindle female taper	MT5
Output torque, (continuous rating)	33Nm
Motor Power	1.8kw

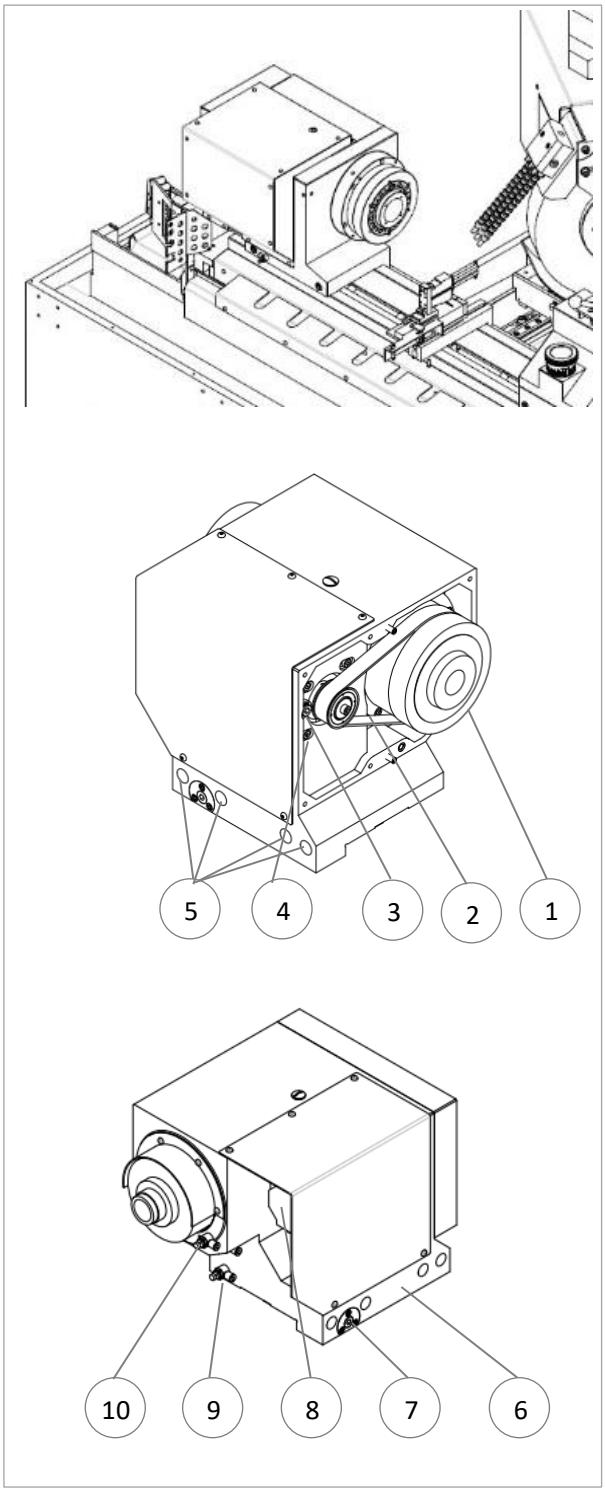

3.4.1.2 Live spindle（Options）

The live spindle means that the centre rotates synchronously with the spindle and is suitable for mounting chuck fixture.

(1) Workpiece spindle (live spindle)
(2) Workhead casting
(3) Spindle seal air intake
(4) Workhead airlift air intake
(5) Drive motor
(6) Workhead clamping screw
(7) Motor mounting plate
(8) Motor adjustment screw
(9) Drive belt
(10) Belt pulley

Live spindle, fixed base	
Spindle speed range , continuously variable	1-1000rpm
Spindle nose	A2-6
Spindle female taper	20C
Output torque, (continuous rating)	33Nm
Motor Power	1.8kw

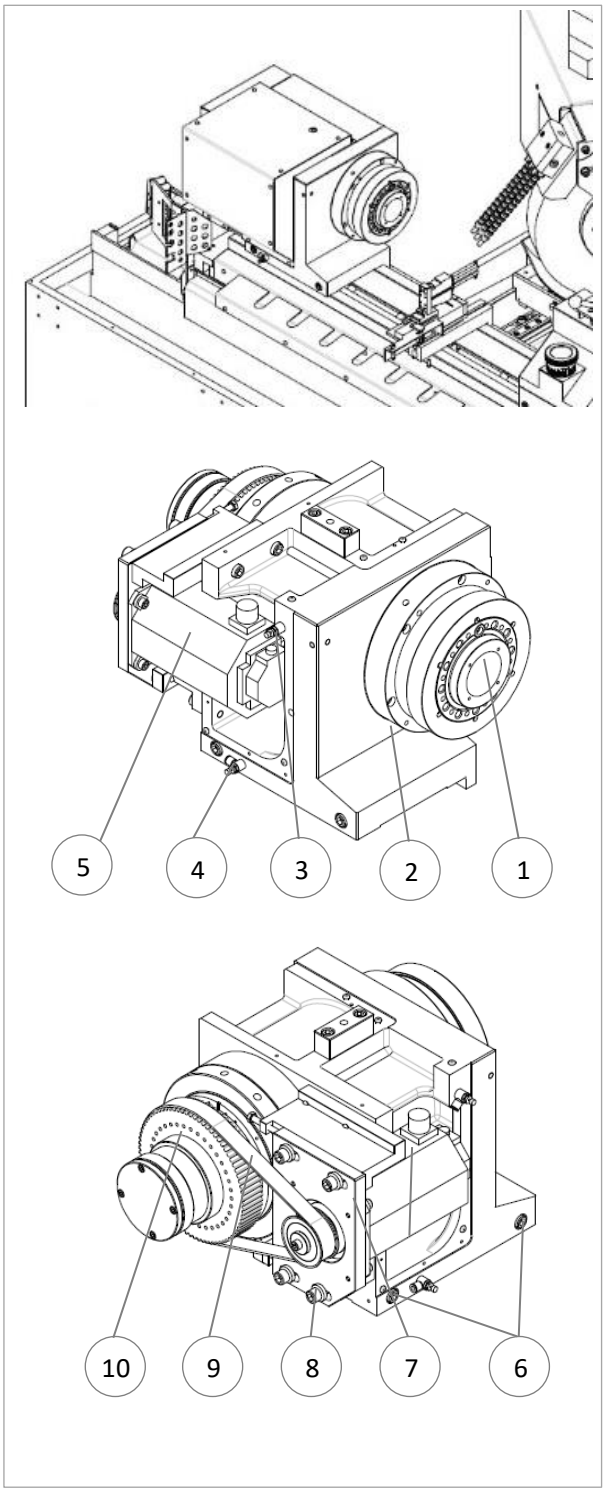

3.4.1.3 Hydraulic / pneumatic lever mechanism (Option)

The function of the hydraulic/pneumatic clamping device is to activate the clamp mounted on the head of the workpiece spindle. It is controlled by a button on the handheld control box.

This device consisted of the following components:

(1) Cylinder shield
(2) Draw bar
(3) Cylinder
(4) Thrust block for adjusting the stroke of draw bar
(5) Oil return port of cylinder
(6) Connecting plate of cylinder (3)
(7) Foot switch which is used to clamp and unclamp the cylinder.

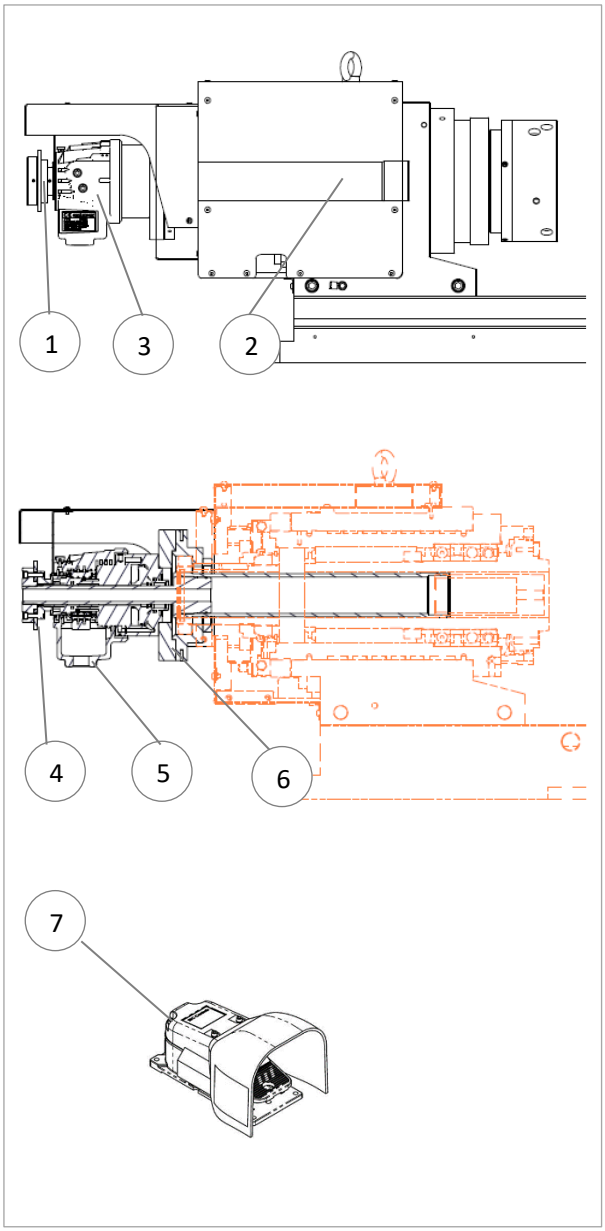

3.4.2 Tailstock

The tailstock is used for clamping and grinding between the two tips.
Retraction of the tailstock sleeve is available in two versions:
• tailstock with pneumatic sleeve retraction (Option)
• tailstock with manual sleeve retraction

3.4.2.1 Manual sleeve retraction

In order to clamp and unclamp the workpiece, the tailstock sleeve is operated manually.

(1) Tailstock sleeve
(2) Lever
(3) Micro corrector for taper adjustment
(4) Clamping screw

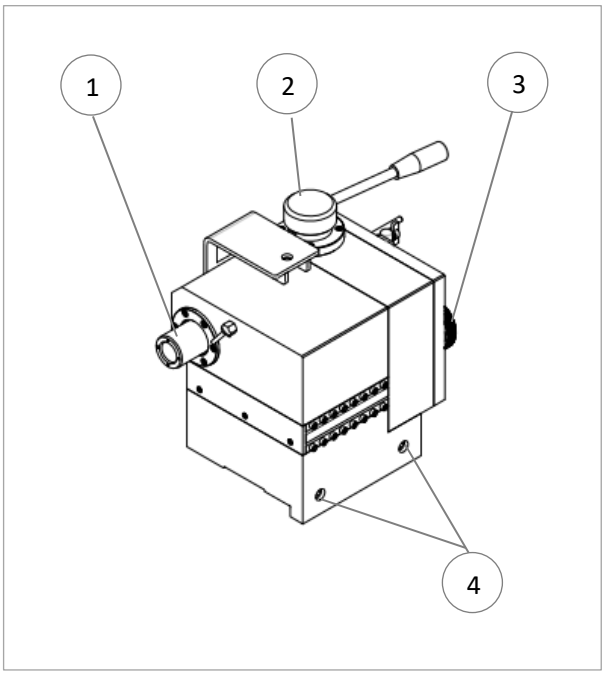

3.4.2.2 Pneumatic sleeve retraction

In order to clamp and unclamp the workpiece, the tailstock sleeve is operated pneumatically.

(1) Tailstock sleeve
(2) Micro corrector for taper adjustment
(3) Cylinder
(4) Clamping screw
(5) Foot switch which is used to clamp and unclamp the cylinder.

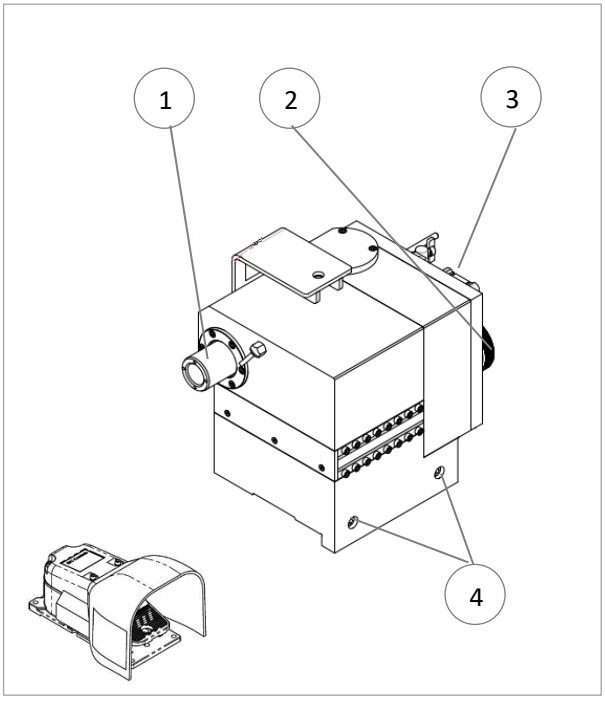

3.4.3 Wheelhead

The grinding spindle and grinding wheel are installed on the wheelhead.

3.4.3.1 Straight forward wheelhead (Type E)

Grinding wheel	Diameter maximum	500mm
	Width	80/150mm
	Bore	203.2mm
Mounting cone		1:7.5 Ø 72 mm
Grinding wheel speed		63m/s
Motor Power		15kw

(1) Grinding fluid nozzle
(2) Protective cap
(3) Drive motor
(4) Belt pulley
(5) Belt
(6) Grinding spindle
(7) Spindle seat
(8) Cylinder for movable protective cap
(9) Flange
(10) Dynamic balancer
(11) Movable protective cap

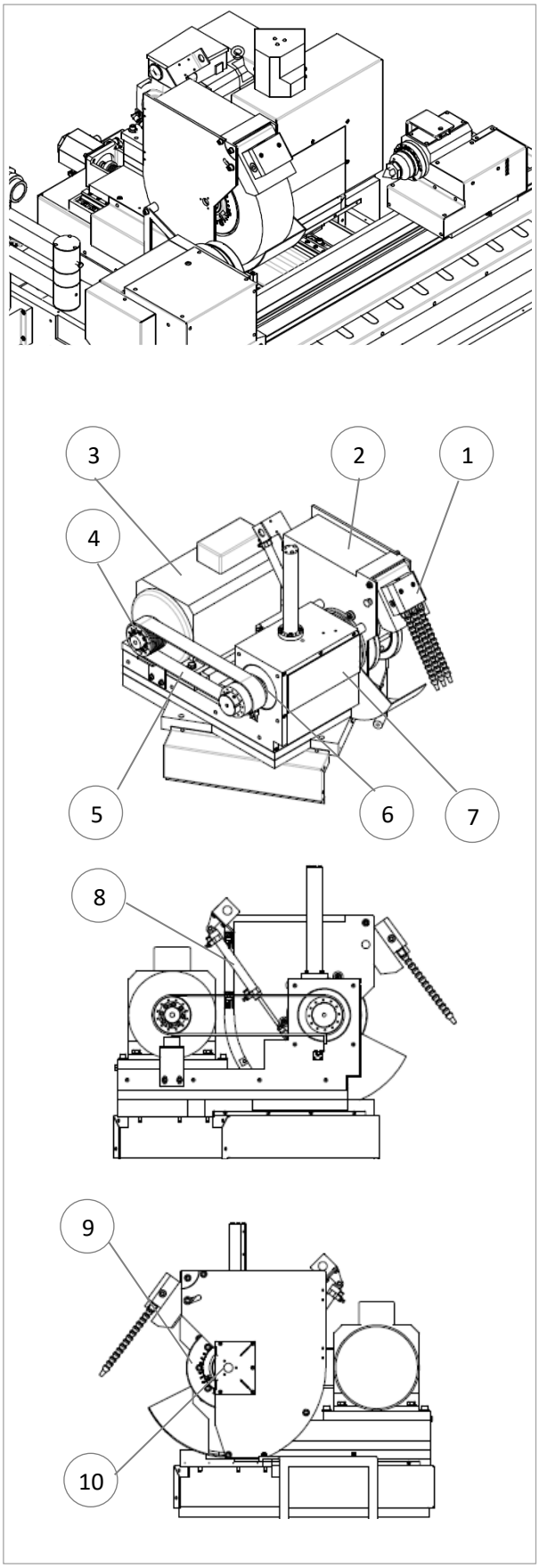

3.4.3.2 Oblique forward wheelhead

Grinding wheel	Diameter maximum	500mm
	Width	80mm
	Bore	203.2mm
Mounting cone		1:7.5 Ø 72 mm
Wheel speed		63m/s
Motor Power		11/15kw

(1) Grinding fluid nozzle
(2) Protective cap
(3) Drive motor
(4) Belt pulley
(5) Belt
(6) Grinding spindle
(7) Spindle seat
(8) Cylinder for movable protective cap
(9) Flange
(10) Balancer
(11) Movable protective cap

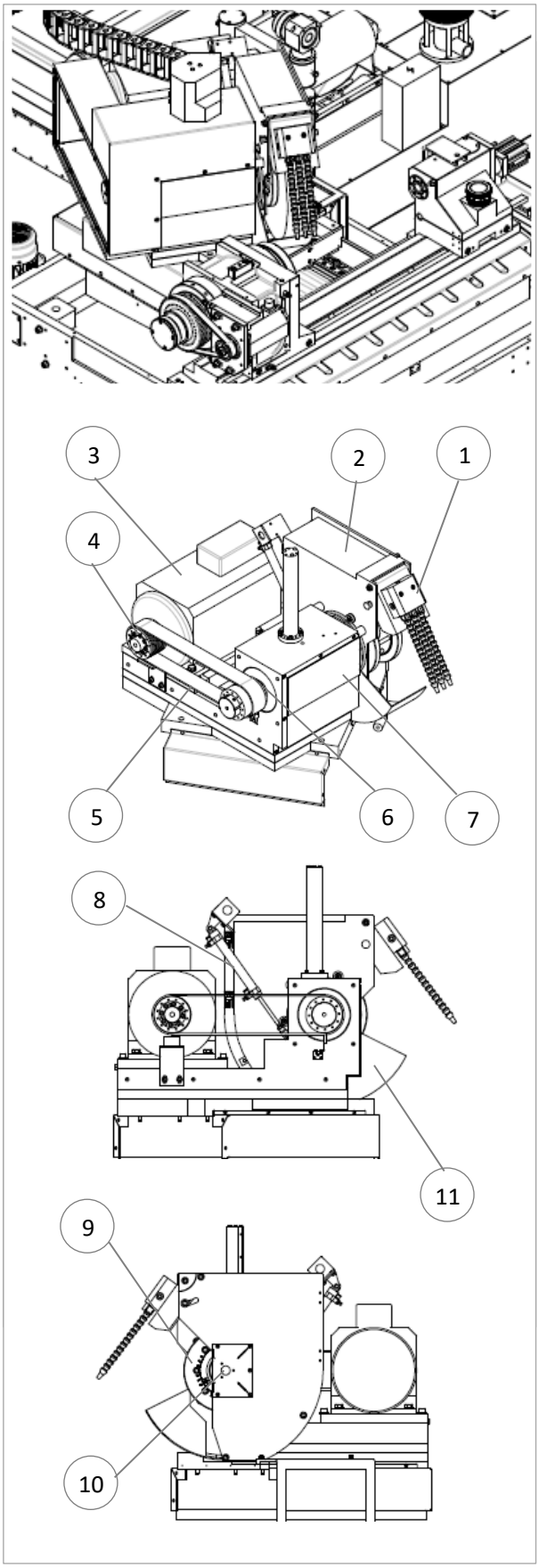

3.4.4 Table (Z axis)

The table (Z-axis) is used to mount the workhead, tailstock, dressing device and other accessories, loading the workpiece to move along the Z axis.

It is driven by a FANUC AC digital servo motor that is directly connected to the ball screw. Manually scraped V-flat rails with a special surface plastic. Heidenhain linear scale can be selected.

The following table assemblies are found on the table:

(1) Machine bed and V-flat rail
(2) Heidenhain linear scale
(3) Table
(4) Pipeline socket
(5) Table pipeline / circuit wiring protection slot
(6) Z-axis drive motor

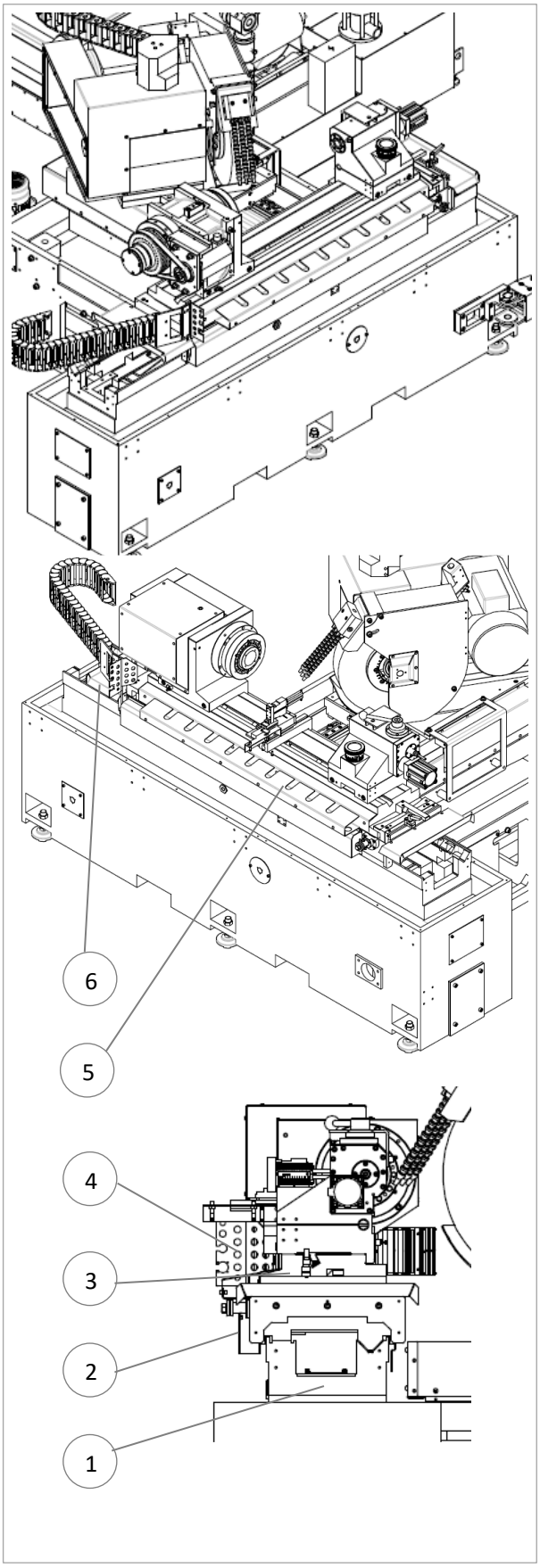

3.4.4.1 Replacement of Z-axis moto

The following procedures permit the replacement of the machine tables, as well as other mobile parts drive motors.

Caution!
The replacement of the drive motors must be made with the machine switched off (main switch in the "OFF" position).

Replacement of the Z table drive motor must be made by applying the following procedure:

- Move the table to the right and power off the machine
- Remove the Z-axis left side cover, just remove the cover and bracket fixing screws to lift the cover.
- Remove Z-axis motor power cable and feedback signal cable (3).
- Disconnect the coupling (2) first, then remove the four screws fixed the motor (1)
- Replace the coupling (2) to the new motor shaft with a torque of 15um, then install the motor into the motor base (make sure the coupling is aligned with the screw shaft)
- Lock the four screws with a torque of 30um, and then tighten the coupling with a torque of 15um
- Connect the motor power cable and feedback signal cable and install the cover
- Turn on the machine tool and reset the reference point.

Attention!
These procedures must be carried out by qualified personnel.

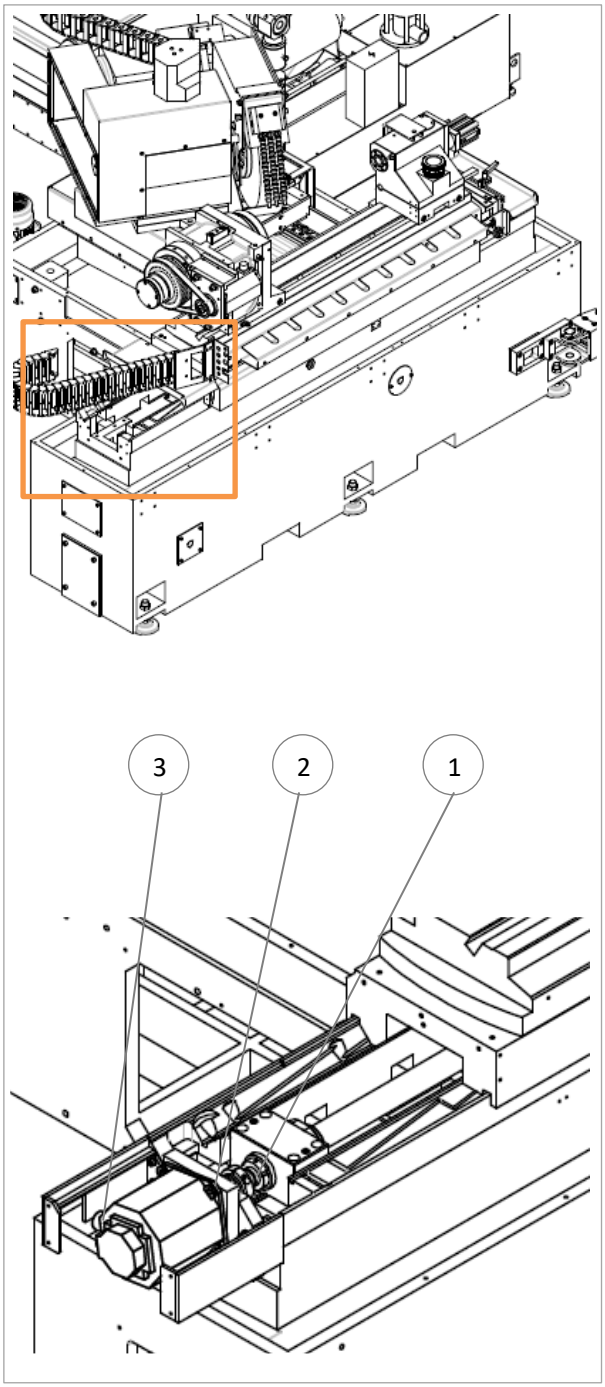

3.4.4.2 Replacement of Z-axis linear scale (Option)

All positions of the machine tables are controlled by the linear scale.
The following points of this documentation explain the procedures to replace the linear scale.

Attention!
These procedures must be carried out by qualified personnel.

Important!
The replacement of the "Heidenhain" linear scale must be carried out with the machine stopped (main switch in the "OFF" position).

Replacement of the "Heidenhain" linear scale on the Z table must be made in applying the following procedure:

Disassembling:

- Move the table to the middle position first, then power off the machine
- Take off the linear scale protection
- Remove the signal cable plug and the air pipe.
- Remove the two screws that hold the cursor

Attention! The cursor and the linear scale are linked together, it is therefore not possible to remove them separately.

- Remove the linear scale and cursor assembly by removing the maintaining screws on the back plate.
- Install the new scale and cursor into the center of back plate and tighten the screws (Please notice that the red button to fix the cursor can not be removed. It is used to ensure the gap between the cursor and the ruler. It can be removed after the cursor is fixed)
- Tighten the two screws that hold the cursor , then remove the red button
- Connect the signal cable and the air pipe, install the protective plate (Please notice that the protective plate should be coated with a sealant to prevent the coolant entering to the scale)

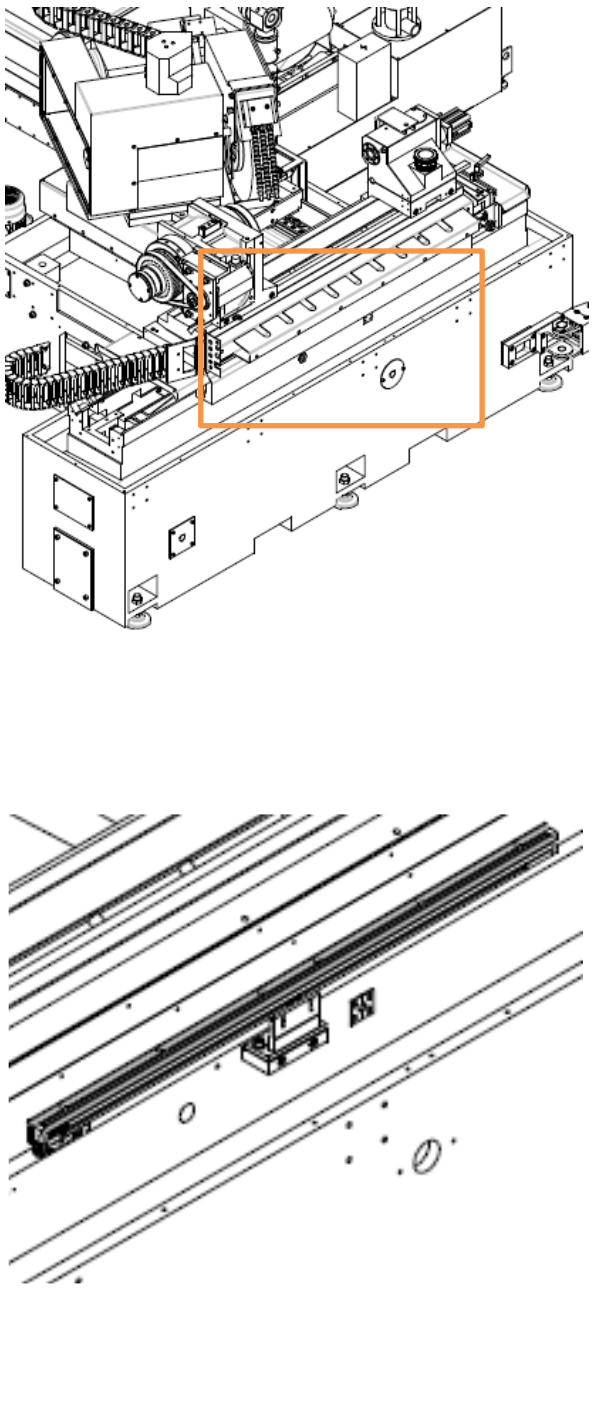

3.4.5 Wheelslide(X axis)

The wheelslide (X-axis) is used to load the wheelhead and the motor to move the grinding spindle in the X-axis direction.

The drive is provided by a FANUC AC "digital" servo motor directly coupled to a ball screw. Heidenhain linear scale can be selected.

The wheelslide consists of the following parts:

(1) Lower part (fixed) of the table (integral part of the machine bed)
(2) Upper mobile part of the table
(3) Linear guide
(4) Drive motor
(5) Coupling
(6) Ball screw
(7) Heidenhain linear scale

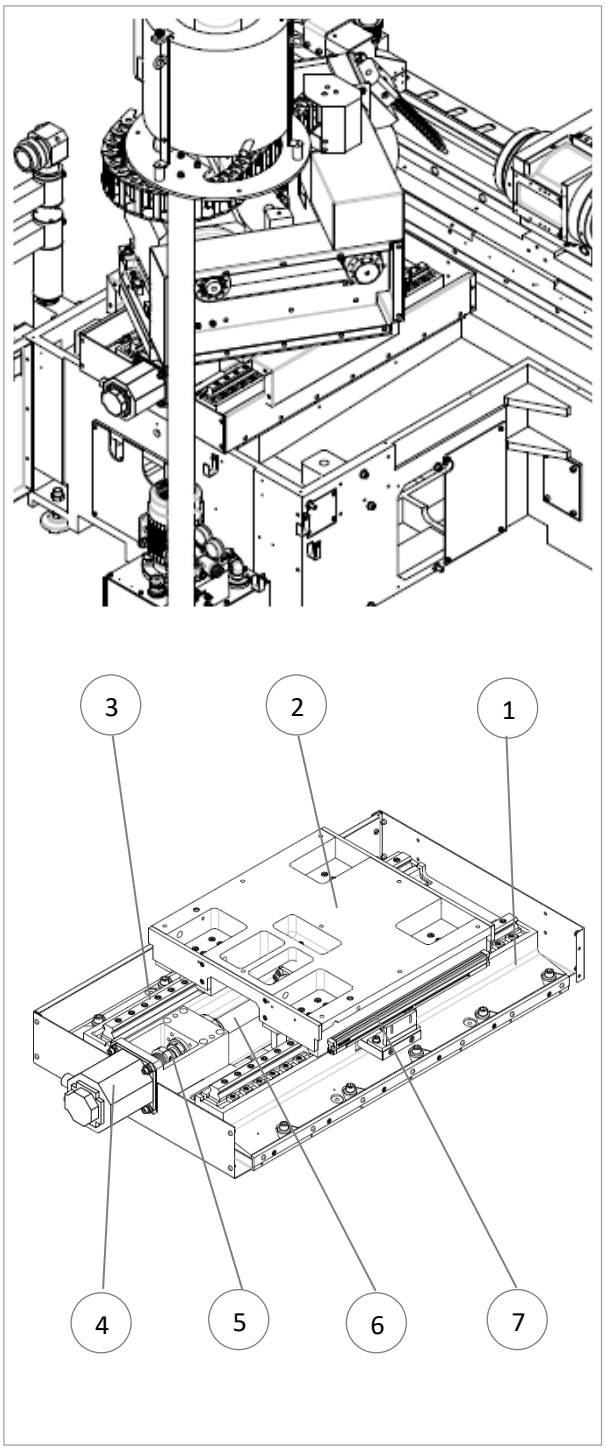

3.4.5.1 Replacement of the X-axis motor

Replacement of the X table drive motor must be conducted by applying the same procedure as followed for the Z table (see Section 3.4.4.1.)

- Move the wheelhead to table and then power off the machine
- Remove the X-axis rear side cover, just remove the cover and bracket fixing screws to lift the cover.
- Remove X-axis motor power cable and feedback signal cable (1)
- Disconnect the coupling first, then remove the four screws fixed the motor (2)
- Replace the coupling (3) to the new motor shaft with a torque of 15 Nm, then install the motor into the motor base (make sure the coupling is aligned with the screw shaft)
- Tighten the four screws to 30 Nm, and then tighten the coupling to 15 Nm
- Connect the motor power cable and feedback signal cable and install the cover
- Turn on the machine tool and reset the reference point.

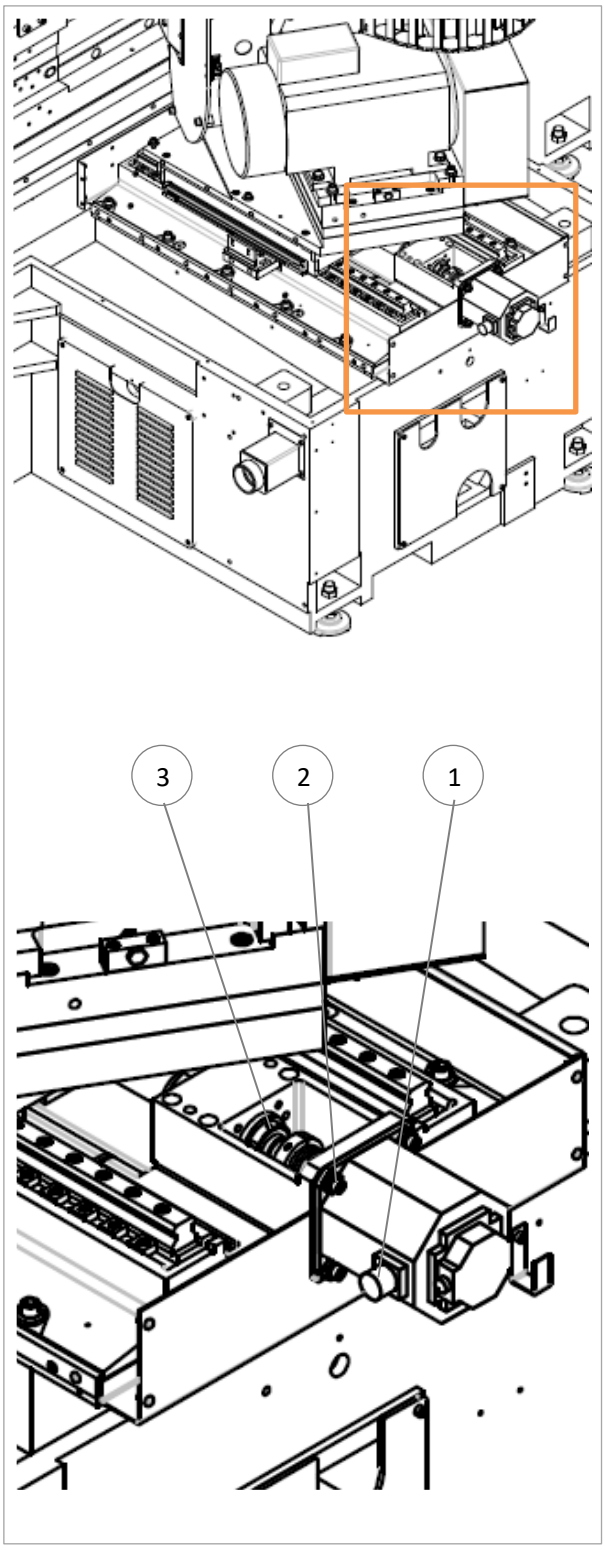

Attention!
These procedures must be carried out by qualified personnel.

Important!
The replacement of the "Heidenhain" linear scale must be carried out with the machine stopped (main switch in the "OFF" position).

3.4.5.2 Replacement of X-axis linear scale

The replacement of the "Heidenhain" linear scale on the X table must be made by following the same procedures for the Z table (see chapter 3.4.4.2):

Disassembling:

- Move the X axis to the middle position first, then power off the machine
- Take off the linear scale protection (Please notice that Type E linear scale is on the left side, Type A linear scale is on the right side)
- Remove the signal cable plug and the air pipe.
- Remove the two screws that hold the cursor

Attention! The cursor and the linear scale are linked together, it is therefore not possible to remove them separately.

- Remove the linear scale and cursor assembly by removing the maintaining screws on the back plate.
- Install the new scale and cursor into the center of back plate and tighten the screws (Please notice that the red button to fix the cursor can not be removed. It is used to ensure the gap between the cursor and the ruler. It can be removed after the cursor is fixed)
- Tighten the two screws that hold the cursor, then remove the red button
- Connect the signal cable and the air pipe, install the protective plate (Please notice that the protective plate should be coated with a sealant to prevent the coolant entering to the scale)

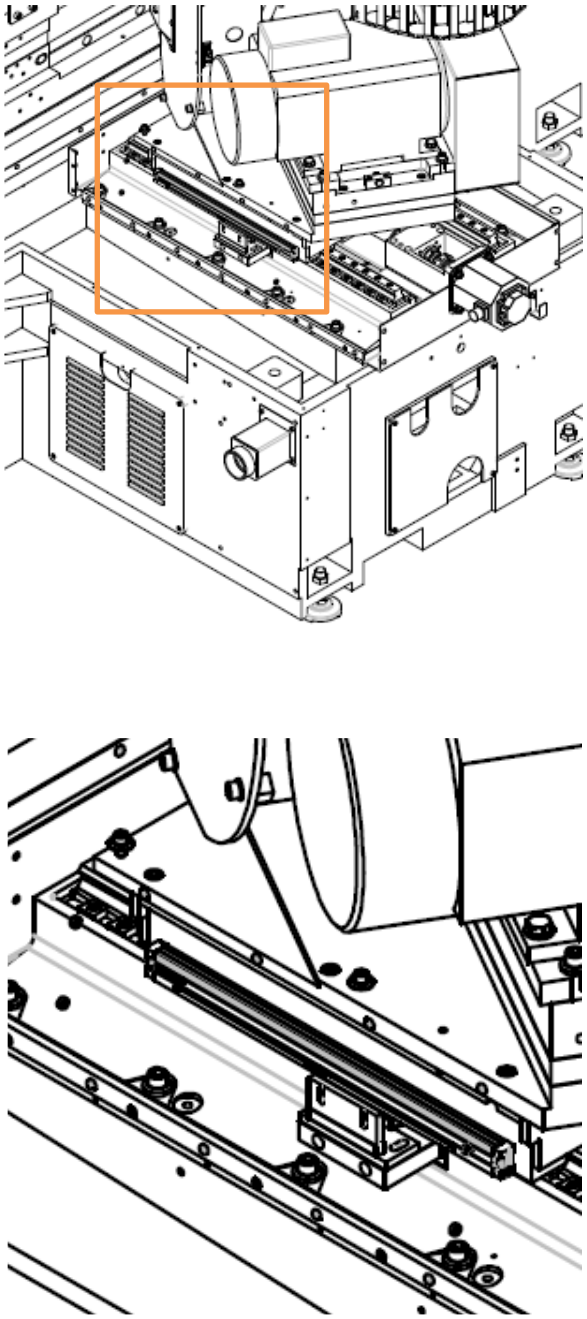

Attention!
These procedures must be carried out by qualified personnel.

Important!
The replacement of the "Heidenhain" linear scale must be carried out with the machine stopped (main switch in the "OFF" position).

3.4.6 Dresser

The diamond dresser is mounted on the workhead, tailstock or table of the machine tool for dressing the grinding wheel during machine dressing cycle.
It is the reference point between the workpiece and the various grinding wheels

There are two basic forms of dressers,

3.4.6.1 Fixed dresser

The fixed dresser is part of the basic machine and is conventionally mounted on the inside of the workhead, it can carry single or multiple point diamonds.
This dresser permits to dress conventional type wheels.

(1) Dresser seat
(2) Diamond holder

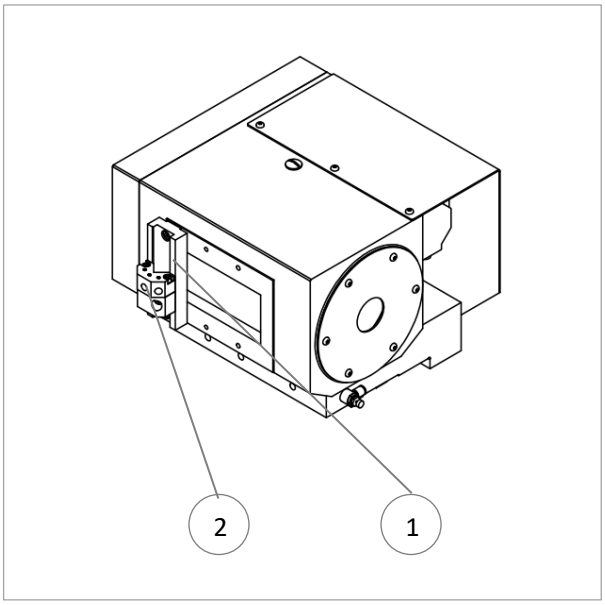

3.4.6.2 Rotary dresser

The rotary dresser is made of an adjustable support in which a HF spindle with a diamond wheel is mounted.

This dresser allows to dress CBN type wheels.

(1) coolant nozzle
(2) Drive motor spindle
(3) Spindle seat
(4) Protection cover
(5) Diamond dressing roller

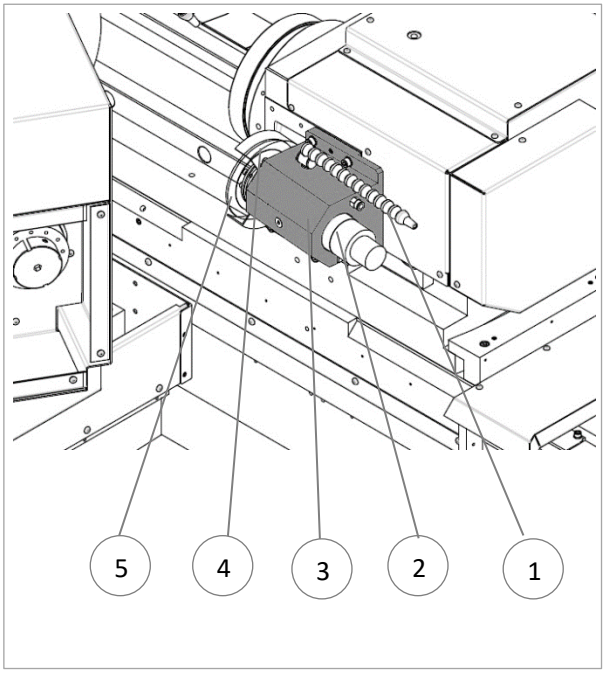

3.4.7 Control console

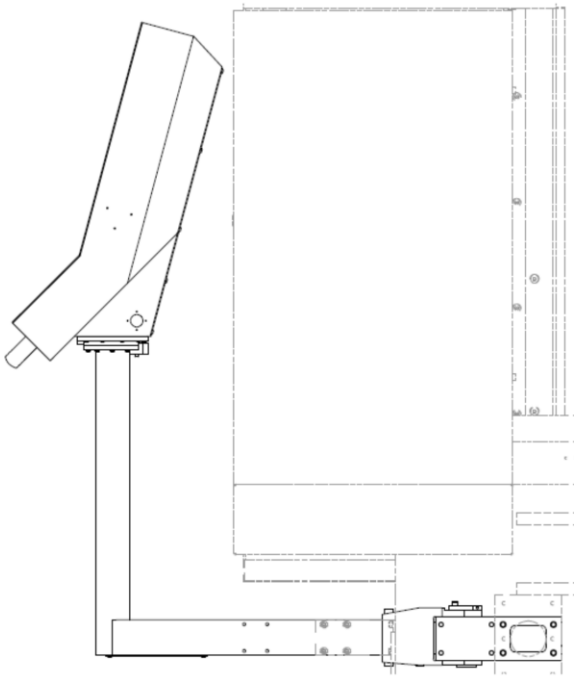

The control console functions are:
- Programme the machine cycles ;
- Control the manual as well as automatic movements of the machine ;
- Visualise the programmes and the status of the various elements of the machine.

This console is made of the following main elements :

(1) Manual Pulse Generator
(2) QWERTY keyboard
(3) Control instrument panel
(4) LCD screen
(5) Functions keyboard
(6) Emergency stop push button
(7) Wheelhead retract
(8) Cycle stop
(9) Cycle start
(10) Workpiece spindle speed override knob (OVERRIDE)

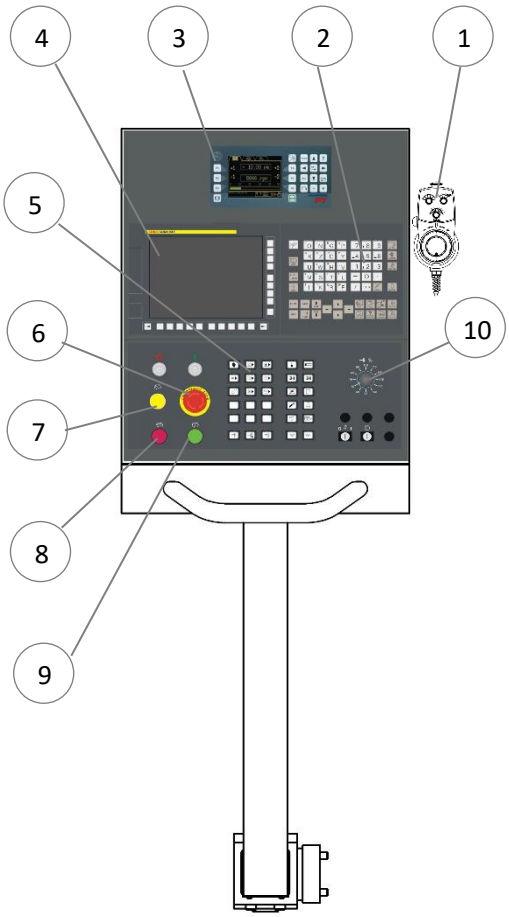

Note: The functions of all elements on the control console are described in more details in the programming chapter.

3.4.8 Electrical cabinet

The drive components and controls for all actions of the electrical part of the machine tool are stored inside the electrical cabinet.

The electrical cabinet basically consists of the following parts:

(1) Relay
(2) P7 host
(3) Servo module
(4) Power switch
(5) Breaker
(6) Contactor
(7) PLC
(8) Transformer
(9) Terminal block
(10) Air conditioning for electric cabinet

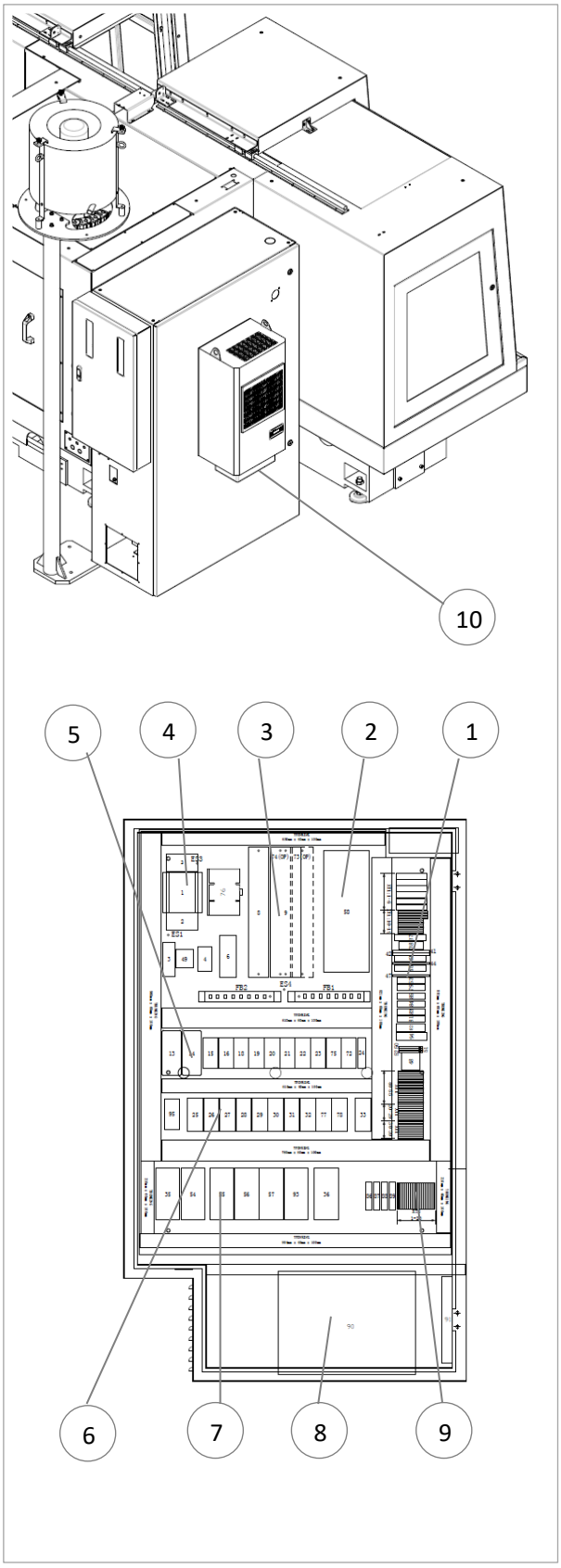

Note: For detailed position and model, please refer to the parts list in the electrical diagram.

3.4.9 Hydraulic and pneumatic device

3.4.9.1 Hydraulic system (Option)

The hydraulic system is configured according to the needs of the application.

This option is not available for this machine tool.

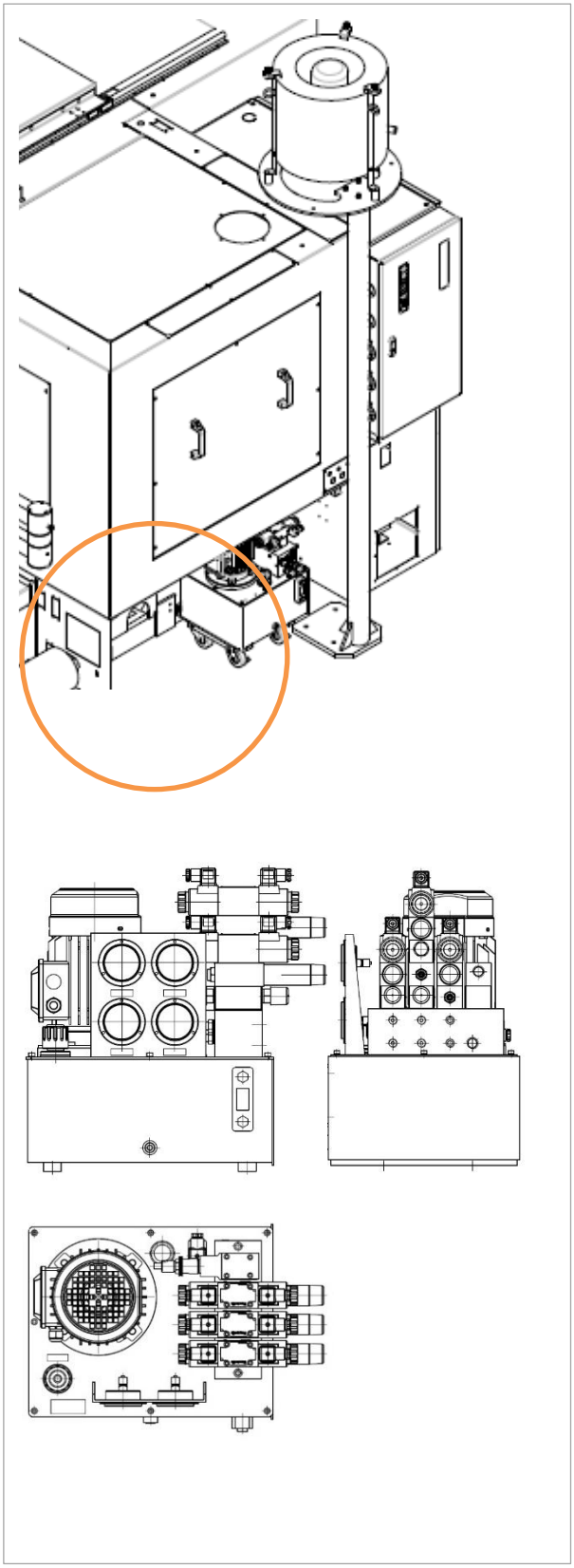

3.4.9.2 Pneumatic unit

The pneumatic system plays a very important role in the normal operation of the machine. For example, the automatic chip blowing of the spindle, the safety door switch of the sealed and closed machine tools, the action of the manipulator, the advance and retreat of the measuring instrument and so on, are inseparable from the pneumatic system.

During the inspection, it is important to check whether the pneumatic components can work normally, whether there is leakage, whether the action is sensitive, and whether the lubrication is good. At the same time, it is also necessary to check whether the action of measuring instruments, safety valves and pressure breakers is reliable, and whether the data displayed on the meter is within the specified range. In addition, check whether the quality and the amount of the oil in the mister are in compliance with the requirements, add oil regularly.

The pneumatic unit consists of the following parts:

(1) Observation window
(2) Pneumatic unit cover
(3) Data interface
(4) Solenoid valve group
(5) Air supply filter combination
(6) Pressure reducing valve
(7) Filter valve
(8) Optical scale air filter
(9) Air supply connection

Air supply requirement	
Input Pressure	5.5 bar
Required Flow	40-50 l/min
Air Supply Quality	ISO 8573-1:2001

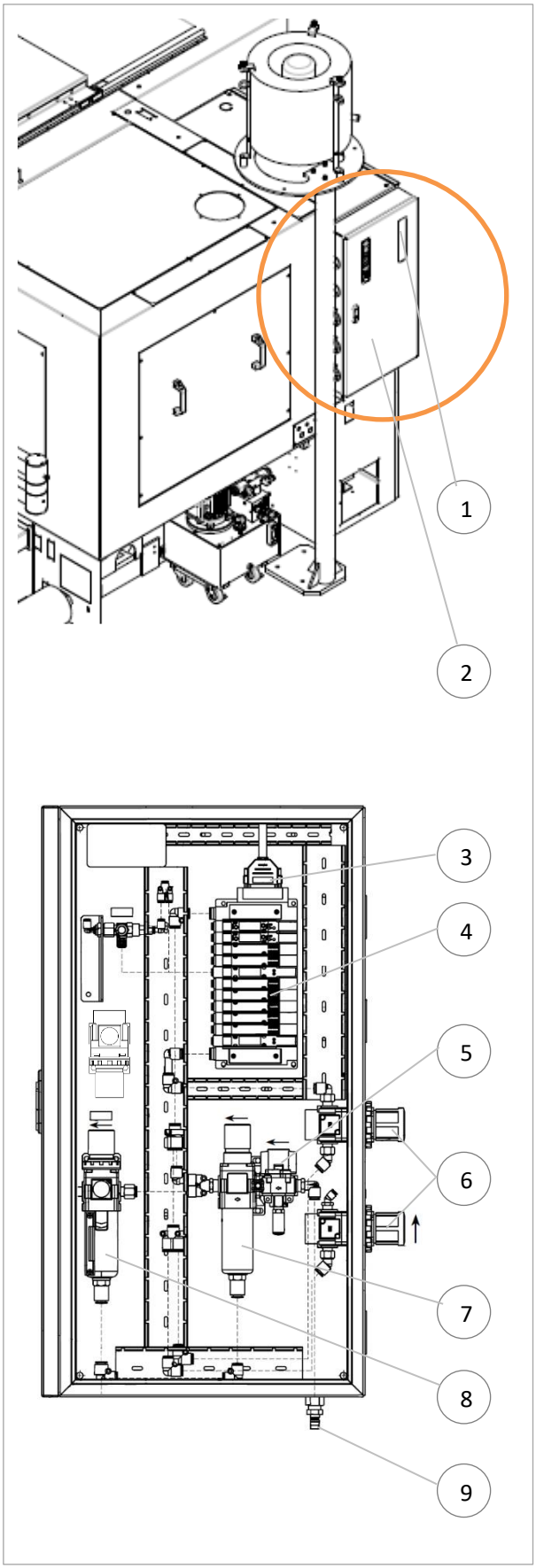

3.4.10 Wet grinding fluid conditioning system

The machine may be connected to either an existing centralized system or to a filter supplied with the machine. It will be located on the side of the machine.

The cutting liquid (coolant) must not react to PUR piping and seals on machine tools. Mineral soluble oils similar to CASTROL SYNTILLO can be used. The coolants used must comply with European or national directives concerning health and the environment.

The wet grinding fluid conditioning system is switched on at the same time than the machine. It is used for:

- Thermal stabilization and cleansing of the machine bed
- Through the spindle cooling of the workpieces
- Direct workpiece cooling
- Cooling of the wheels during dressing
- Cooling of the wheels during grinding
- Cooling of the diamonds during dressing

The whole cooling system is supplied through one fitting (1).

The wet grinding fluid is collected from a drain pipe (100 mm diameter). See (2)

Manual taps are available along the lines to allow adjustment of the coolant flow.

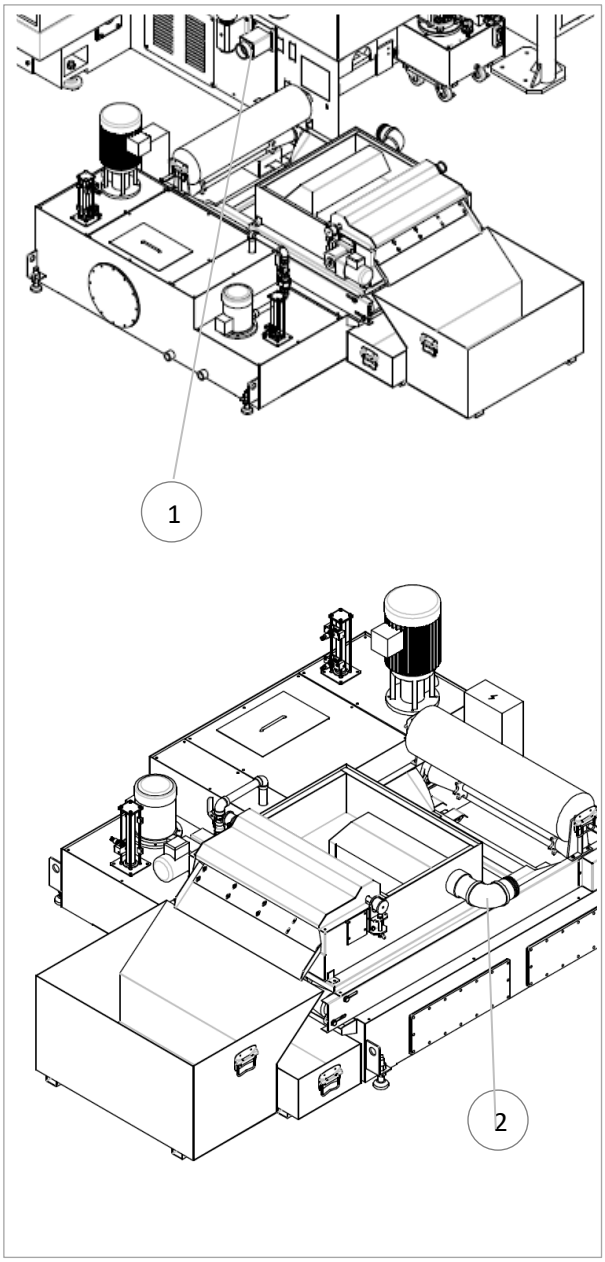

3.4.11 Mist Extraction Unit

When the controller is powered on, the suction port produces a strong negative pressure that forces the oil mist to be directed into the mist eliminator. The tiny oil mist particles are gathered into larger particles under the action of the wind wheel in the mist eliminator, then collected by the high-efficiency absorbing material and returned through the return circuit.

(1) Support rods (four expansion bolts are fixed on the foundation)
(2) Oil mist connecting plate
(3) Oil mist
(4) Oil mist filter
(5) Oil mist power socket
(6) Oil mist suction pipe
(7) Oil mist drain port

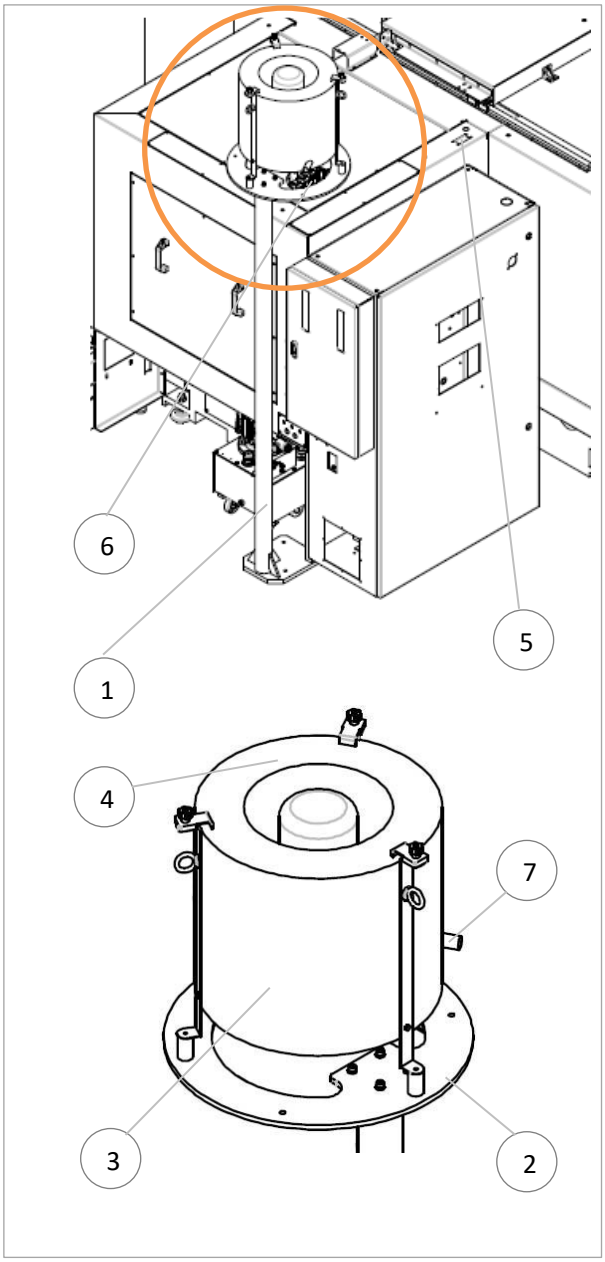

3.4.12 Frame and guardings

The machine is mounted on a stable base and is enclosed in guardings for the protection of the environment and the operator.

These parts are described below:

3.4.12.1 Doors and guards

The machine guardings are as follows:

(1) Left main body of the guardings
(2) Inside opening sliding doors
(3) Right main body of the guardings

Sliding door allowing operator's access to the various part of the machine (workhead, spindles, wheels, dresser, etc.)

Sliding splash guard, to limit the amount of coolant spatter during grinding. This can easily be moved to allow access to the chuck and the workpiece.

The closing of the sliding door is electrically controlled and locked by a device (8) in accordance with the latest safety regulations.

(4) Left service door
(5) Wheel loading and unloading door
(6) Rear service Door
(7) Right service door

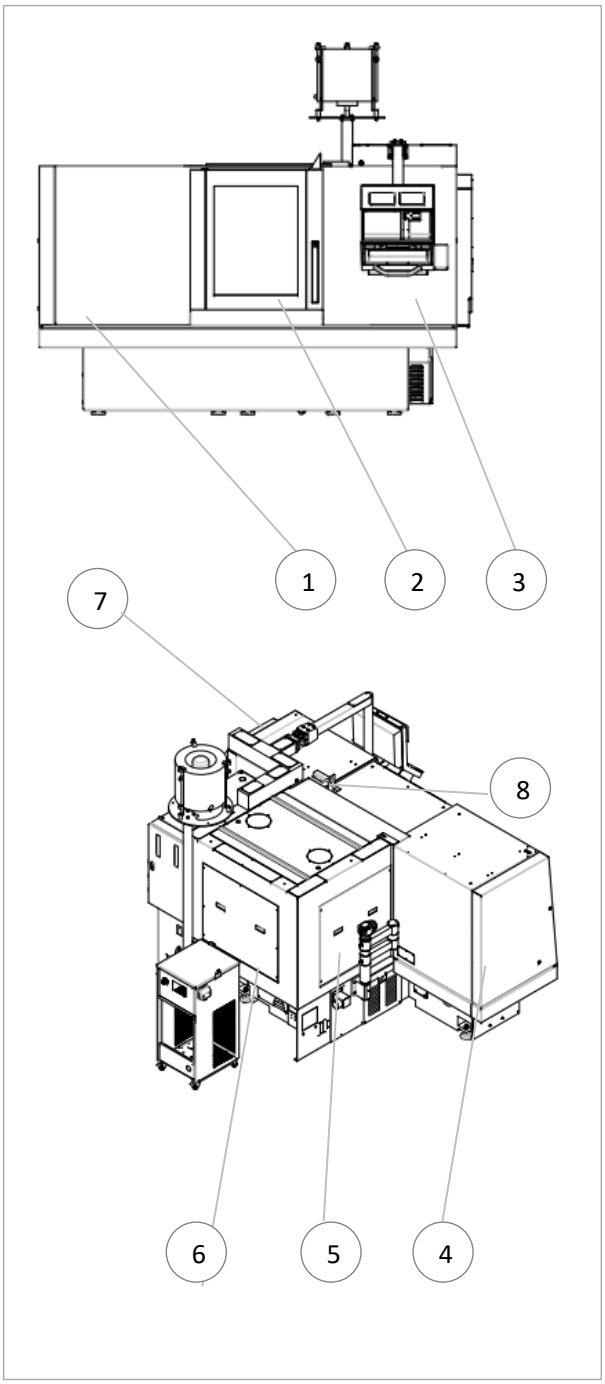

3.4.12.2 Wheelguard

Most area of the grinding wheel is surrounded by the guard (1) to prevent injuries from the burst of the grinding wheel at high speeds.
The oscillating wheel guard (2) will rise to a safe position for protection in case it is needed to keep the grinding wheel rotating when the door of the machine tool is opened.

The movements or the authorisation of movements of the wheelguard are automatically controlled by the programme.

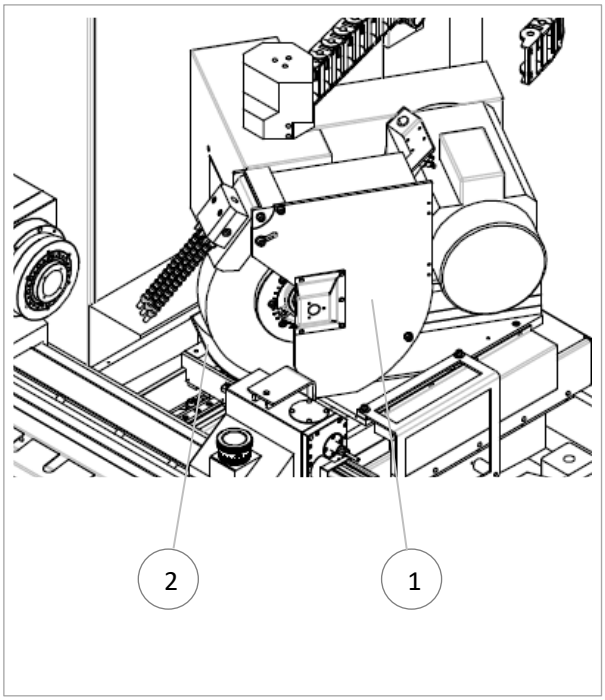

3.4.12.3 Lighting

The work area lighting is achieved with an LED tube (1) situated below the machine frame. It is controlled by PLC or a switch on the control panel.
The LED tube should be replaced whenever the ambient lighting level drops below 300 Lux.

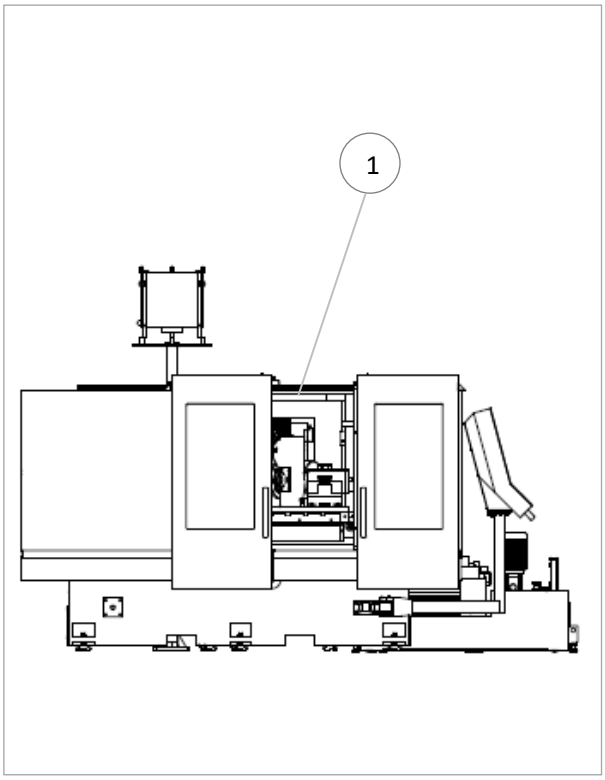

4. Maintenance

4.1 Lubrication and maintenance diagram

Lubrication and maintenance diagram

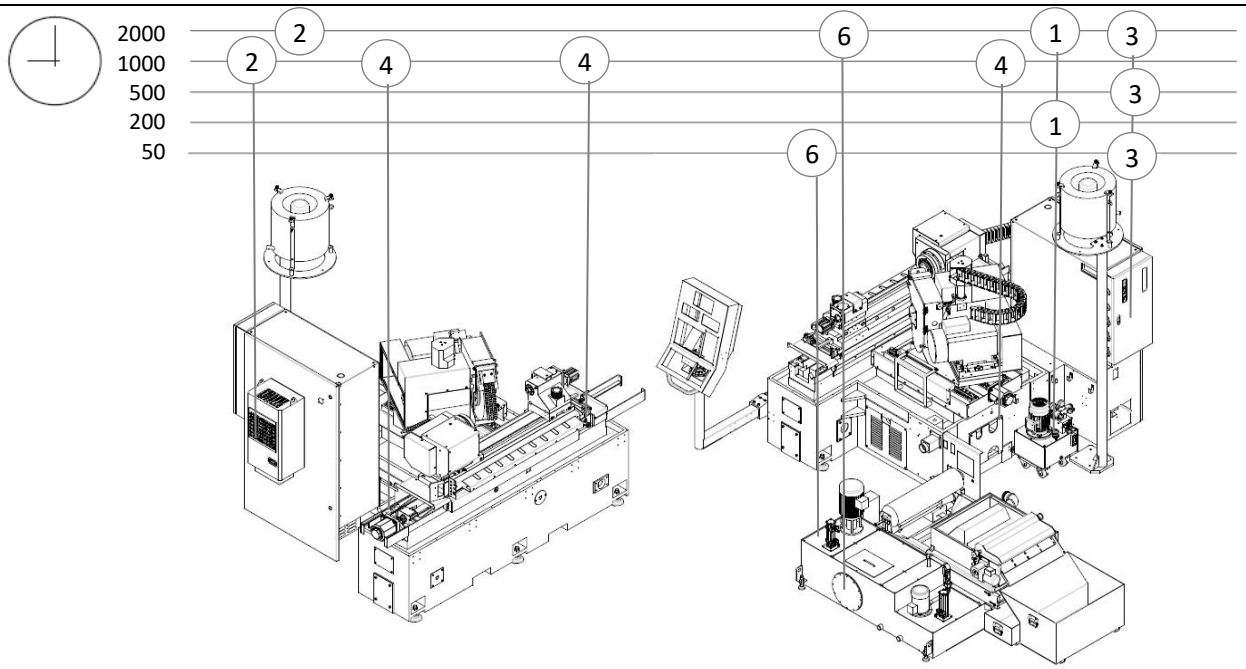

Machine parts	Lubrication system					Grinding fluid	Hydraulic system (none)		
	Lubrication station	Filter cartridge	Heidenhain filter cartridges	Machine	Spindle				
Lubrication location	1	2	3	4	5	6	7	8	9
Symbols				bar	bar			bar	
Check and conditional refilling (h)	200		500	50	500	50			
Clean or replace (h) according to NC message		1000	2000 Or according to the tips						
Drain (h)	2000					2000 or 4000			
Tank Capacity (l)	6					400			
Fluid or lubricant	Oil	Air	Air	Air	Air	Grinding fluid	Oil	Oil	Oil
Recommended lubricant	Tonna S3 M32					QUALSTAR XL			
ISO									

4.2 General maintenance information

4.2.1 Pre-maintenance intervals

The table below gives approximate intervals for each working hour.

Working hours	Single shift	Two shift	Three shift
50	1 week	3 days	2 days
200	1 month	2 weeks	1 week
500	3 month	1.5 months	1 month
1000	6 month	3 months	2 month
2000	1 year	6 months	4 month

4.2.2 Coolant-lubricants

Attention!
Harding prohibits the use of all lubricants and lipids containing chlorine, sulfur and heavy metals. And for the corrosion rate of copper, it must meet the national standards.

Attention!
Harding is not liable for damages caused by non-compliance with these regulations.

Recommended oils and lubricants

Use	HARDINGE
Centralized lubrication	Shell Tonna S3 M32
Hydraulic system	Mobil DTE24
Cooling system	CIMCOOL CIMTECH 3150VLZ（18L)

4.3 Maintenance after 50 hours of operation

The following maintenance procedures must be performed every 50 working hours

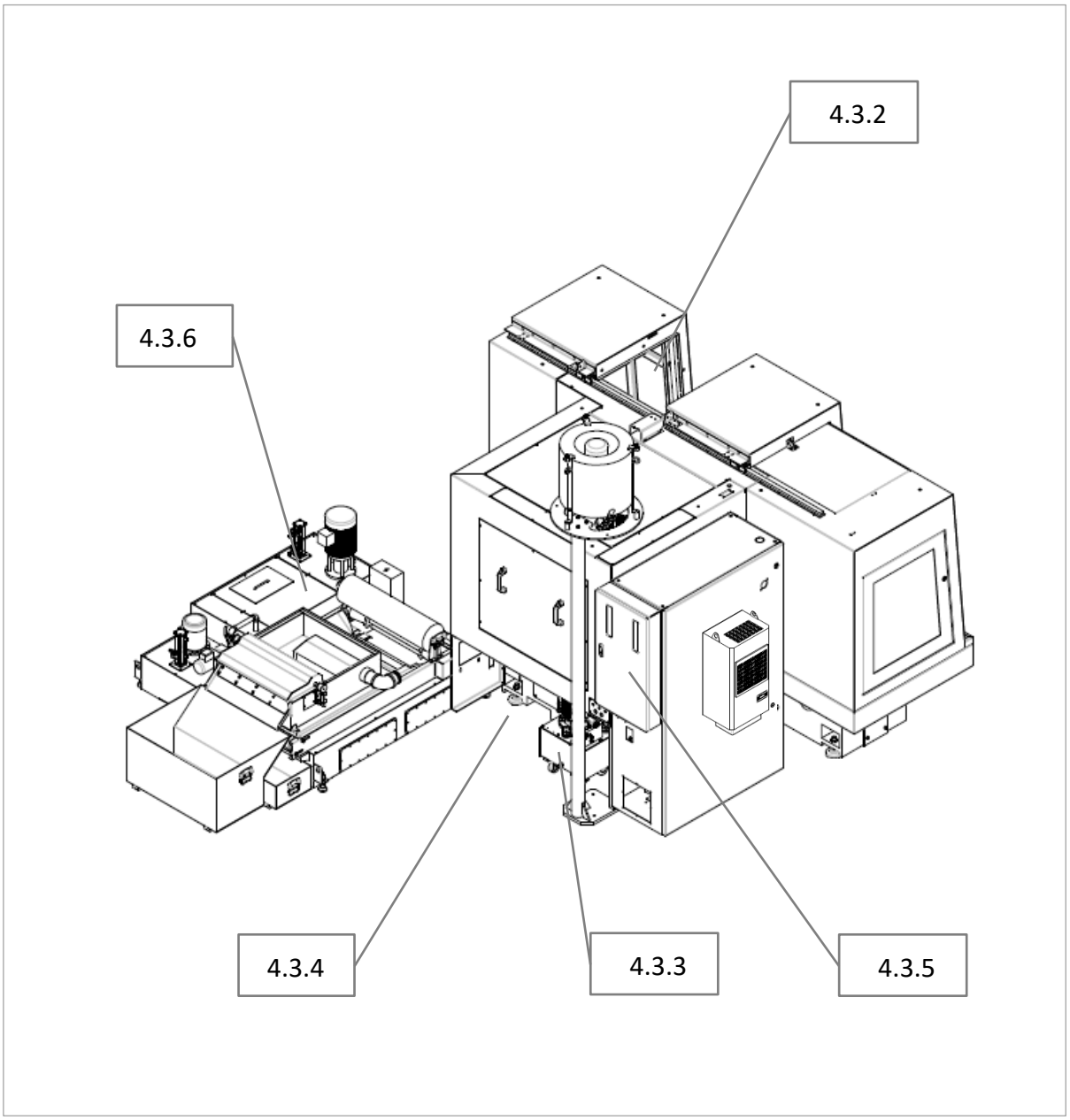

4.3.1 Clean Work Area

Danger!
Cleaning and ordering around the machine is a very important safety indicator

Danger!
Risk of slipping and injuries
Risk of stumbling

Procedure:

- Regularly clean the ground around the machine
- Remove all kinds of oil and grease
- Tools or workpieces cannot be placed on the ground or in the work area
- Lay an anti-slip mat on the floor of the work area if needed
- Regular maintenance of machine tools must be carried in accordance with factory regulations to prevent accidents

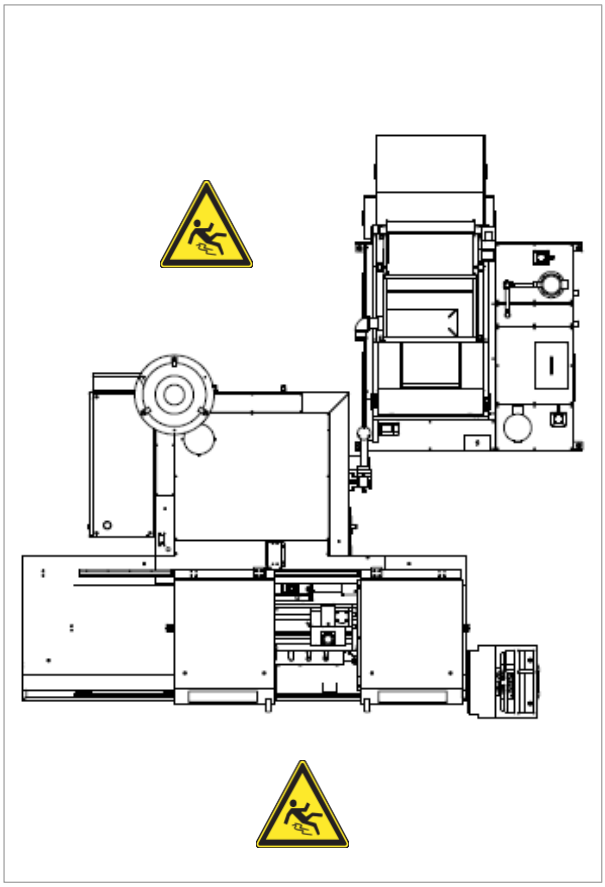

4.3.2 Cleaning the inside of the machine

Caution!
The machine must be shut down.
It is needs to be operated in a ventilated environment.

Important!
Be careful not to damage or change the position of any parts.
Do not use compressed air or other methods that can damage synthetic materials.

Procedure:

- Clean the internal area of the machine (1).
- Remove residual debris left on the machine guard and observation window (2)
- Dry the parts of the machine with a dry rag

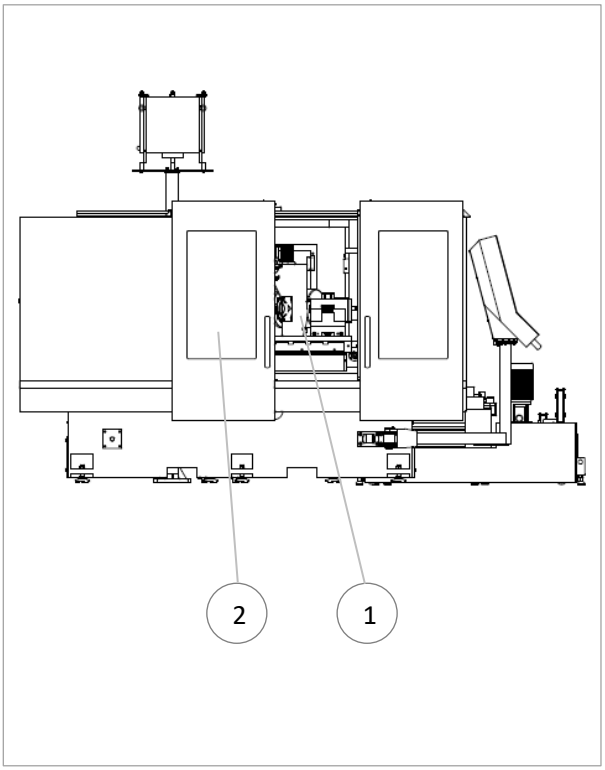

4.3.3 Check lubrication system

Caution!
The machine must be stationary and switched off

Pressure check
Check the oil level by pressure gauge (1)
Adjusting pressure through P1(2) if the pressure is not match.

Level check
Check the oil level by level gauge (4)

standard:
The oil level should not be lower than the MINI mark and higher than the MAXI mark

If the oil level is too low, the sensor will send an alarm signal.

Filling Hydraulic oil

Danger!
Check the hydraulic circuit to confirm that there is no pressure

Procedure:
- Remove the cap (3) from the oil tank.
- Fill the tank (5) with oil as far as the upper mark MAX (4)
- Screw the cap (3) back on correctly

Oil trademark and specification

	Unit	Capacity
Oil trademark	Shell Tonna S3 M32	
Maximum capacity	Litre	20

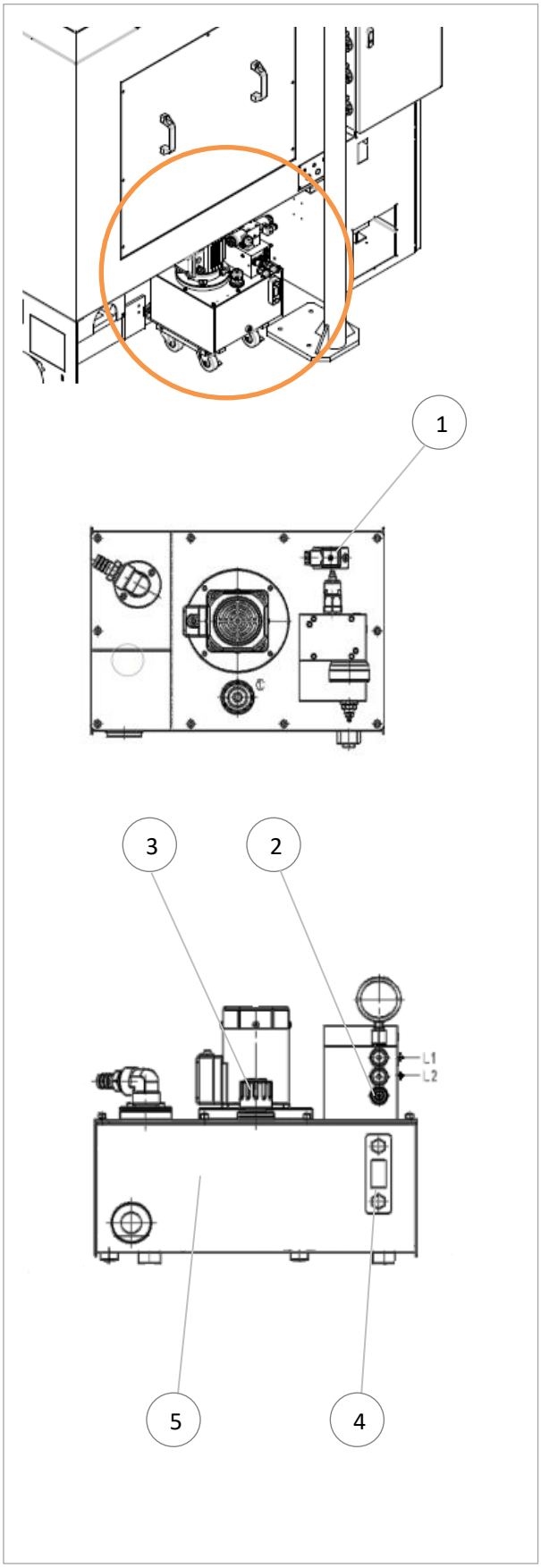

4.3.4 Lubricating oil tank viewing mirror

The main function is the view window of the oil-water separator.The periodic viewing mirror status is as follows: If there is grinding fluid into the lubricating oil path, there will be white liquid precipitation at the bottom of the viewing mirror. There is a slight amount of white liquid is normal because the cover is not completely sealed. If a large amount of white liquid appears in a short period of time or the lubricants of the viewing mirror becomes very cloudy, It can be concluded that the guard is broken and a large amount of grinding fluid into the lubrication system.

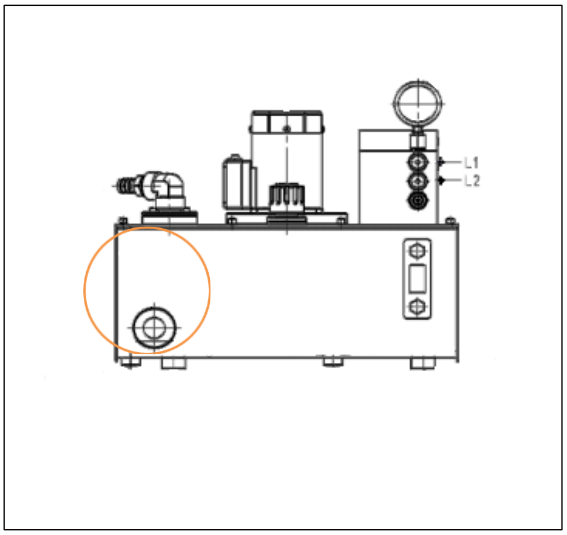

4.3.5 Check hydraulic system oil temperature （Option）

The inside of the oil tank is designed with an oil temperature detection probe.

Oil temperature display:

Attention!
If it is showed that the valve is over pressured
- Do not operate the machine
- Refer to the suppliers' documentation

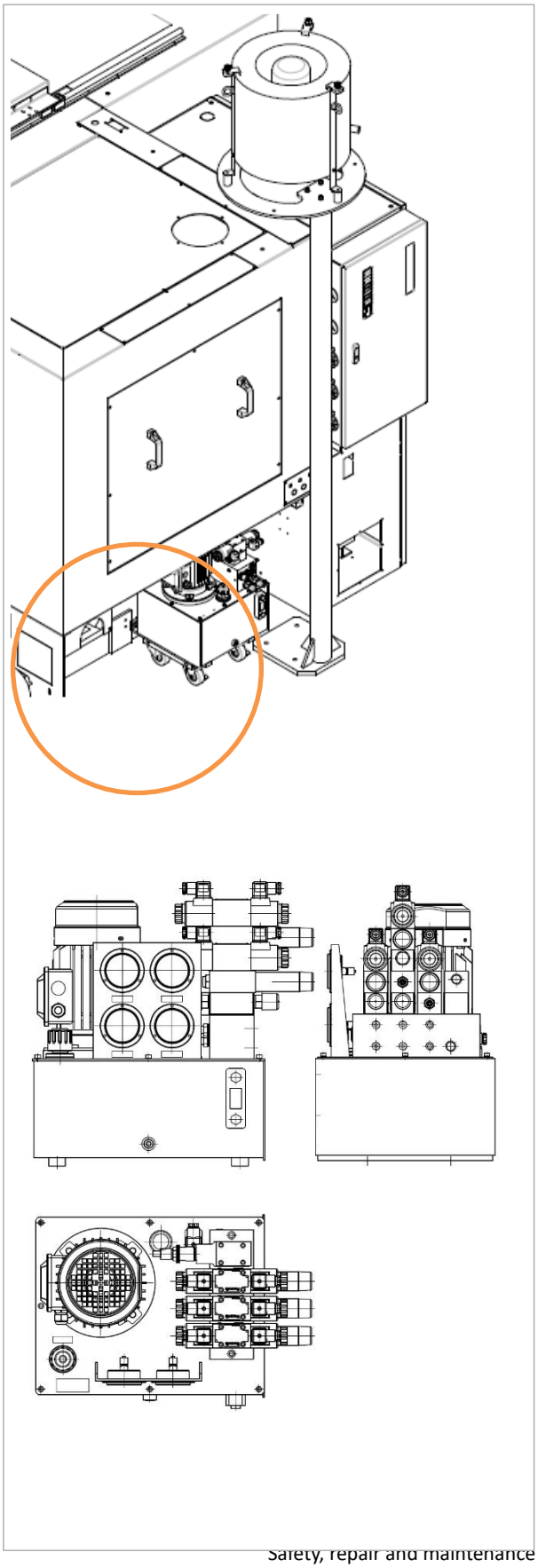

4.3.6 Check pneumatic system

Routine maintenance and regular inspection

- Pay attention to the quality of the compressed air. For various reasons, compressed air contains pollutants such as moisture, oil, dust, etc. and these pollutants are the main cause of malfunction of pneumatic components and the systems.
- Make sure the pneumatic system is well sealed. The sealing of pneumatic systems is directly related to the performance level, reliability, quality and longevity of pneumatic components
- Take appropriate noise reduction measures.
- Check the pipeline and each pneumatic component of the pneumatic system. The main content of the inspection is the management of condensate and lubricants.

Need to check the following pressures:

- （1）Main pressure of the air source: 0.5Mpa
- （2）Line scale air purge:0.1MPa
- （3）Workhead air purge: : 0.3MPa
- （4）Probe lifting pressure measured inside the machine: : 0.45MPa

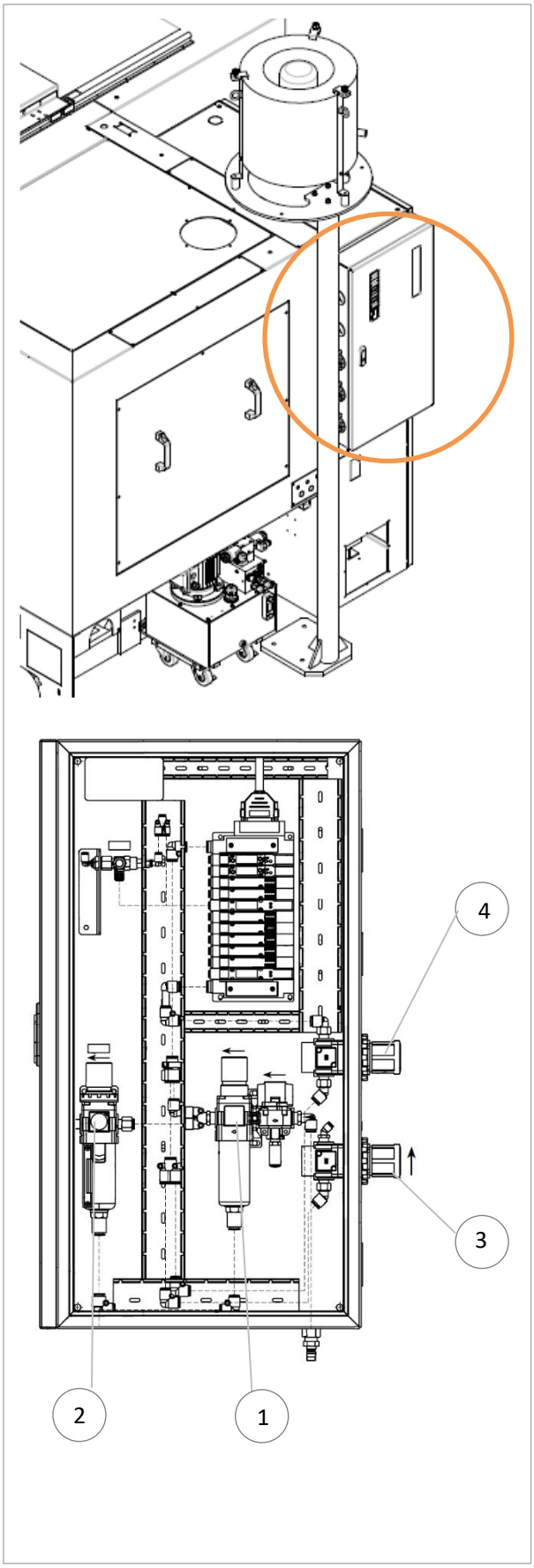

4.3.7 Check the coolant system

Procedure:

- Check the tank connection (1)
- Check machine drain pipe (2)
- Check the coolant system level (3)
- Check filter tape (4)
- Check magnetic separator (5)
- Check grinding swarf and waste paper collection box (6)

（Please refer to the information provided by the manufacturer）

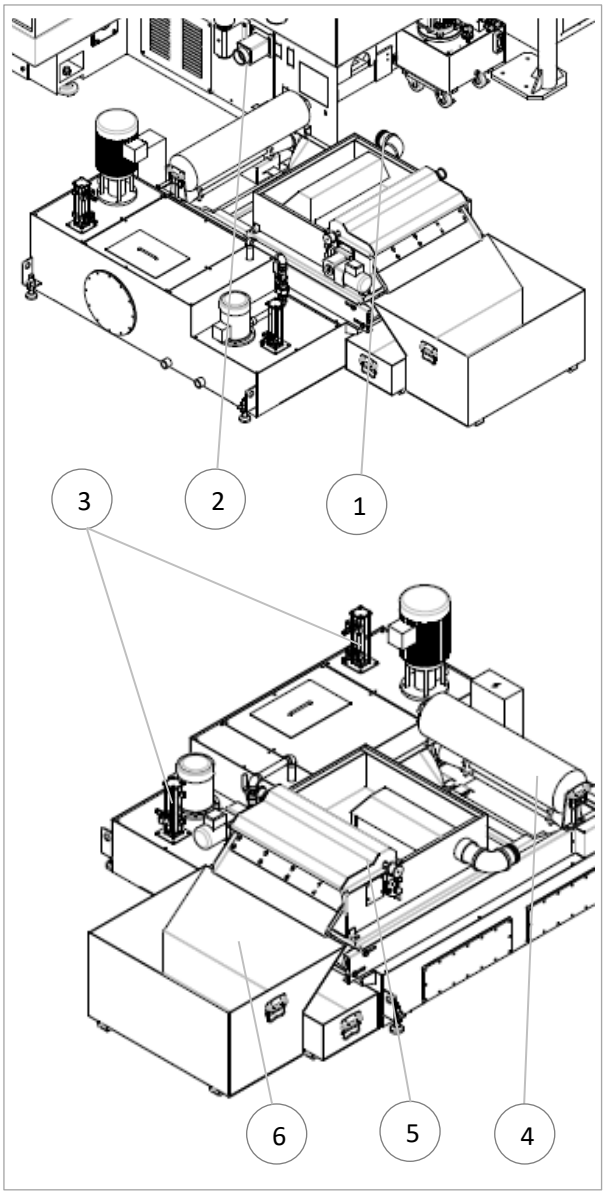

Attention!
Must use products that the materials meet the requirements of machine tool

Components	Material
Pneumatic piping	PUR
Lubrication piping	Nylon
Coolant line	PUR
Connector that contact with liquid	PUR + Nitrile
Electric wiring	PUR
Paint	EPOXI
Observation window	Polycarbonate (Macron)
Lubricating oil	Mineral oil without additives
Metal device	Cast iron + steel

4.4 Maintenance after 200 hours of operation

The following maintenance procedures must be performed every 200 working hours.
View the specific operation flow according to the section identified in the figure below.

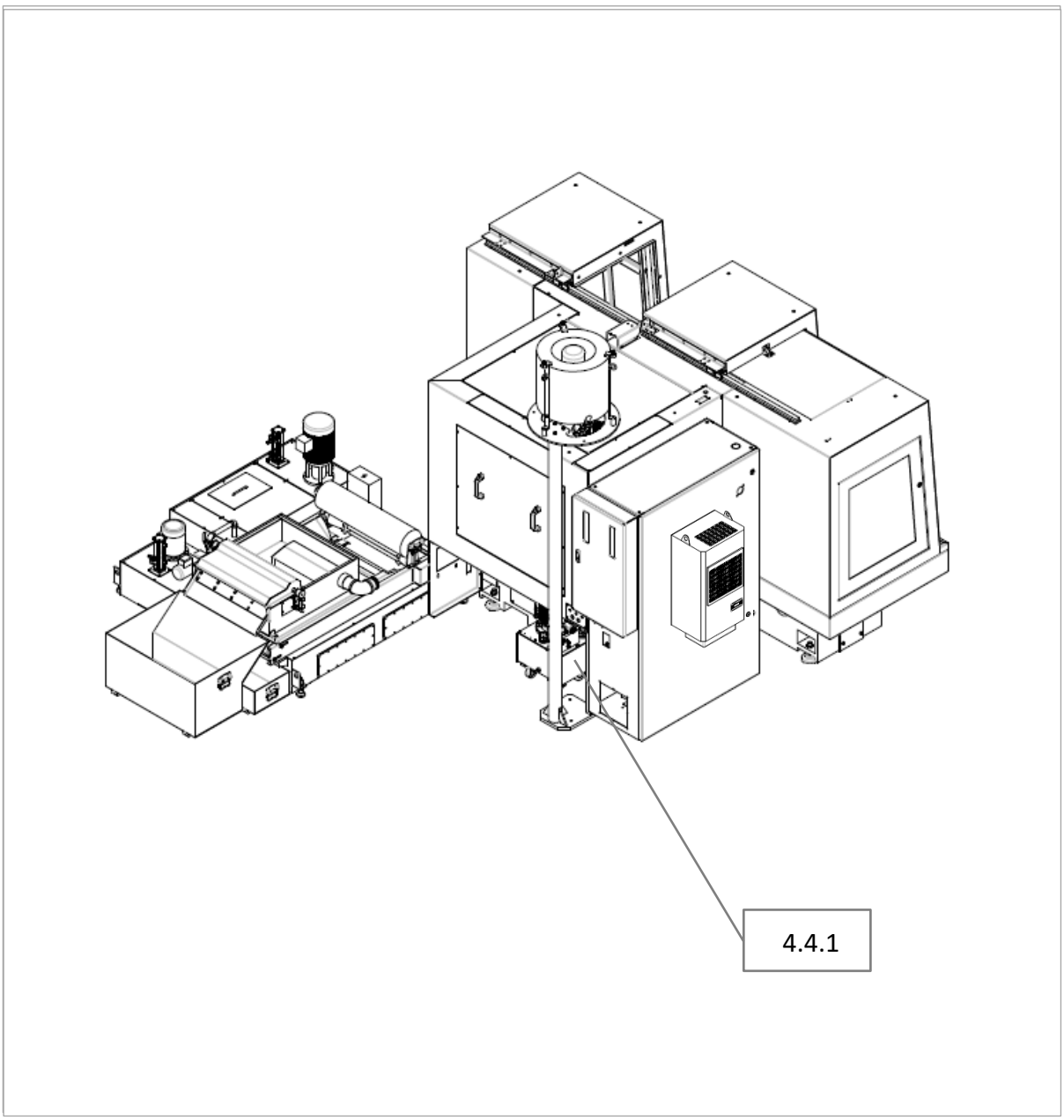

4.4.1 Check central lubrication unit

Procedure:

- Check level (1)
- If necessary, unscrew the lid (2) and fill the tank (3) with oil.

Oil trademark and specification

	Unit	Capacity
Oil trademark	Shell Tonna S3 M32	
Maximum capacity	Litre	20

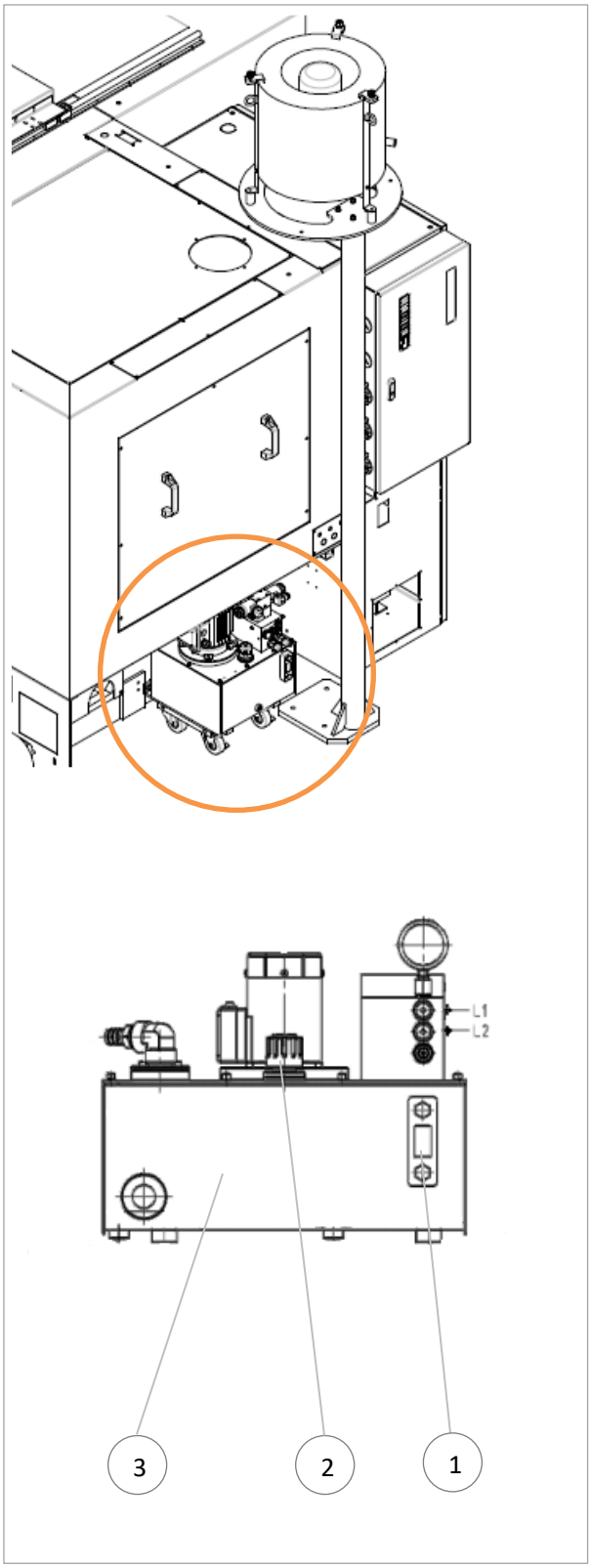

4.5 Maintenance after 500 hours of operation

The following maintenance procedures must be performed every 500 working hours.
View the specific operation flow according to the section identified in the figure below.

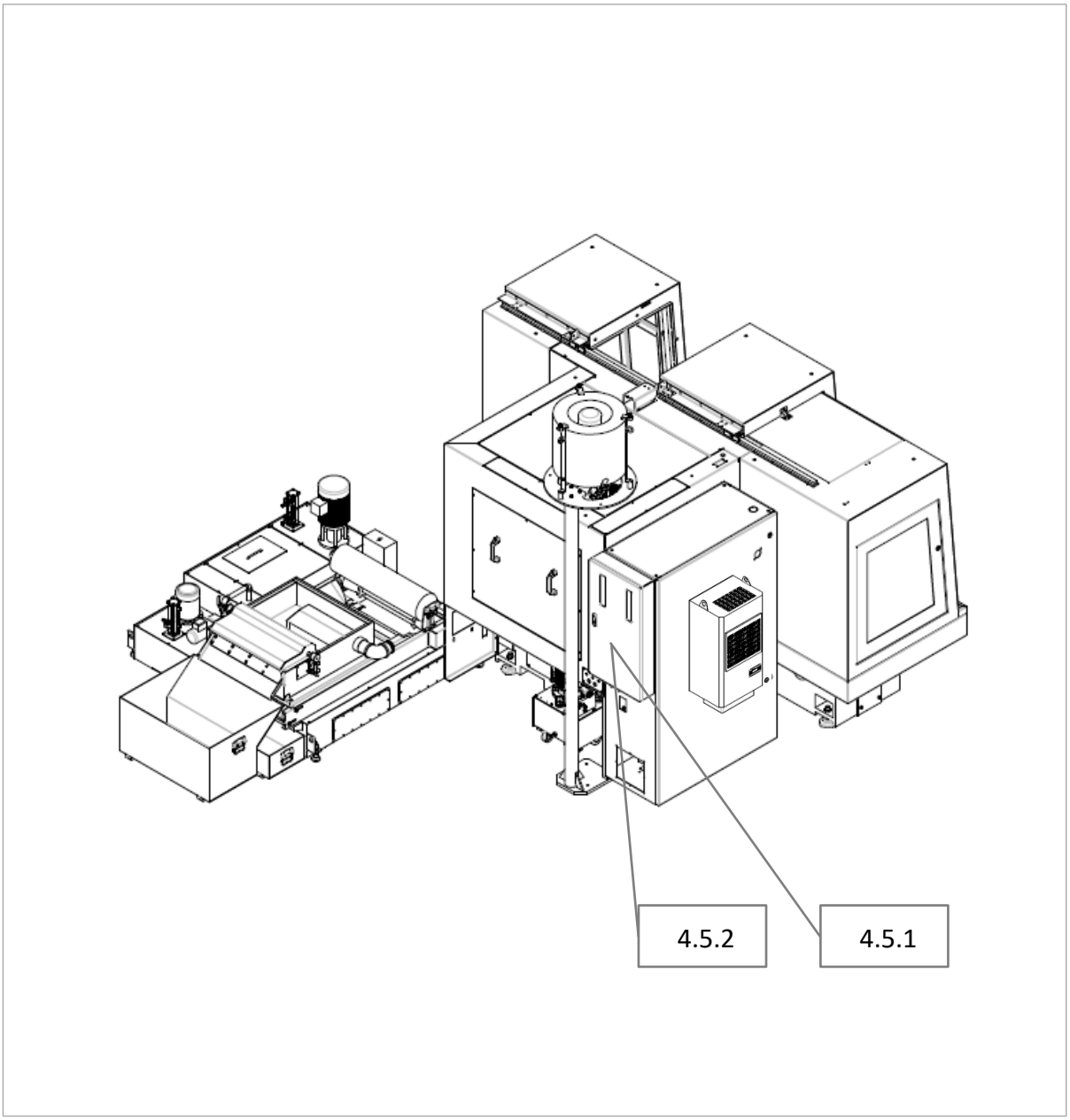

4.5.1 Check oil mist lubrication system (Option)

The oil mist lubrication system is used to lubricate the moving parts of the machine. There are 3 points on the machine that need to be checked.

Procedure:

- Make sure the machine is turned on
- Disconnect the output (1)
- Point the pipe mouth against a piece of paper and see if oil marks appear every 90 seconds.

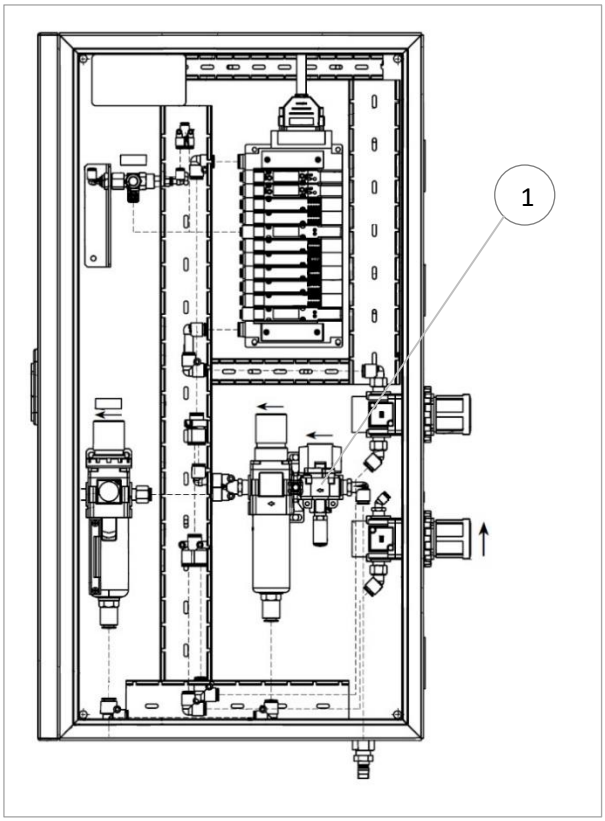

4.5.2 Check and clean the linear scale filter

Procedure:

- Check filter
- Turn off machine pressure
- Unscrew the filter cup cover (1)
- Remove the filter cartridge (2)
- Clean the filter cup cover (1)
- Install the cup cover (1)
- If the filter is dark, it must be replaced.

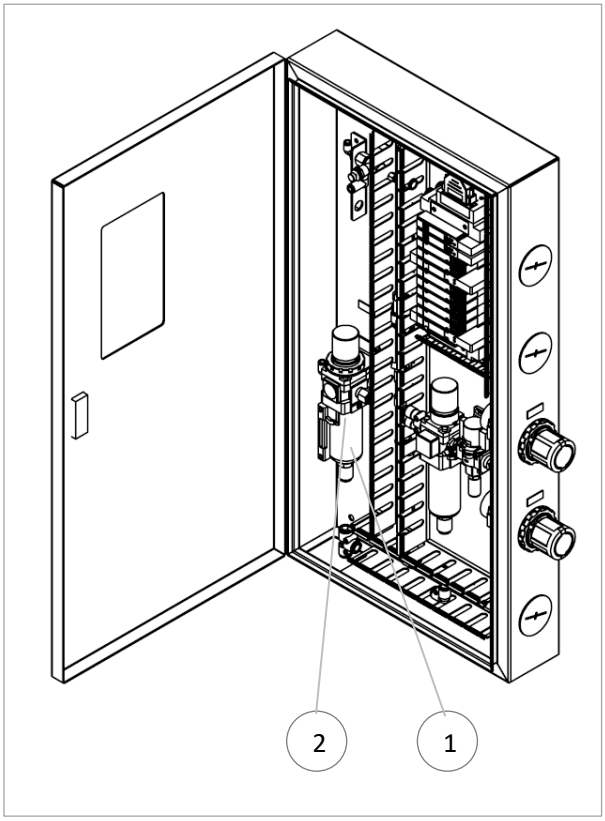

4.5.3 Cleaning oil mist filter

Procedure:

- Turn off the machine
- Turn the three compression knobs (1) 90 °
- to release
- Lift the filter (2) up
- Install the filter after cleaning, then tighten the three compression knobs

Filter cleaning
If the structure of the filter is still intact, place the filter in a mixture of industrial detergent and water for about 12 hours for filter regeneration (rather than replacement). Dry with air or compressed air before reloading the filter.

Internal cleaning
In order to keep the efficiency of air filter and extend its life, clean all internal components (guardings, drains, etc.) carefully and regularly.

For internal cleaning of air filters and wheels (turbine or centrifuge), immerse them in a mixture of industrial detergent and water, and clean with a brush Standard cleaning soaps can also be used.
If the stain is stubborn, it is recommended to remove the wheel and use the mixture of other industrial lotions to clean it. The wheel should be immersed in water for at least 12 hours.
Allow the centrifuge unit to dry in the open air or dry with compressed air.

Important!
Used filters and washers are special waste. Storage and disposal should be carried out in accordance with current regulations.

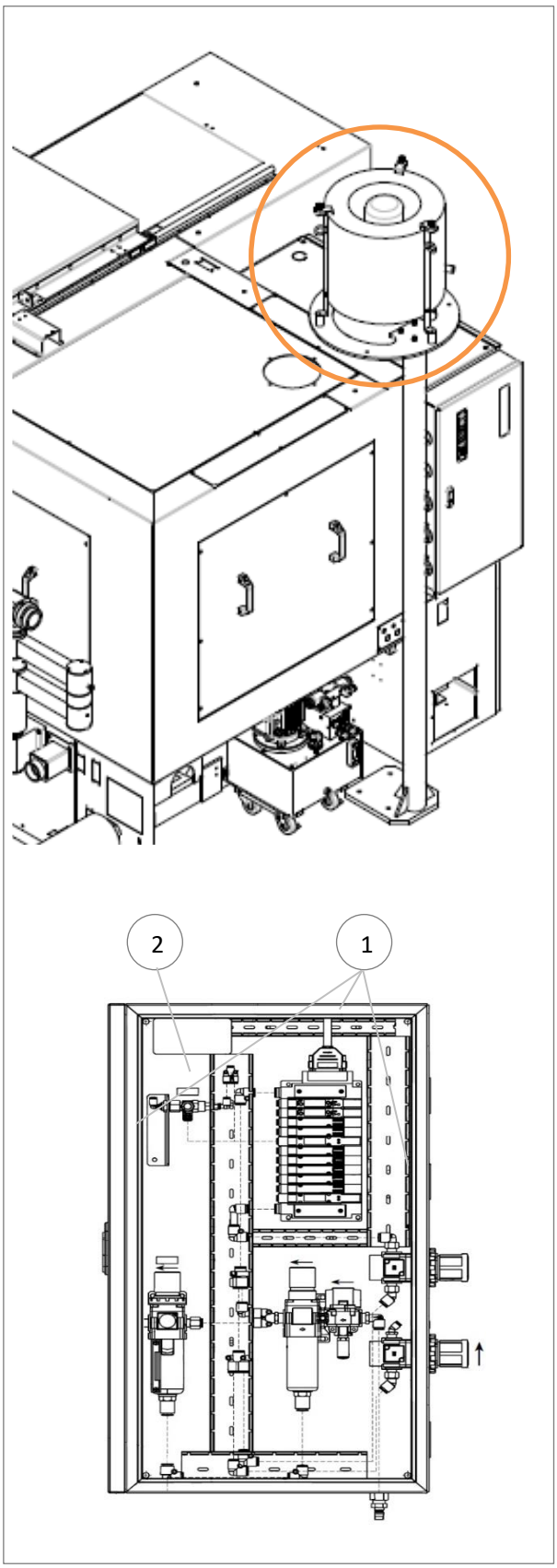

4.6 Maintenance after 1000 hours of operation

The following maintenance procedures must be performed every 1000 working hours.
View the specific operation flow according to the section identified in the figure below.

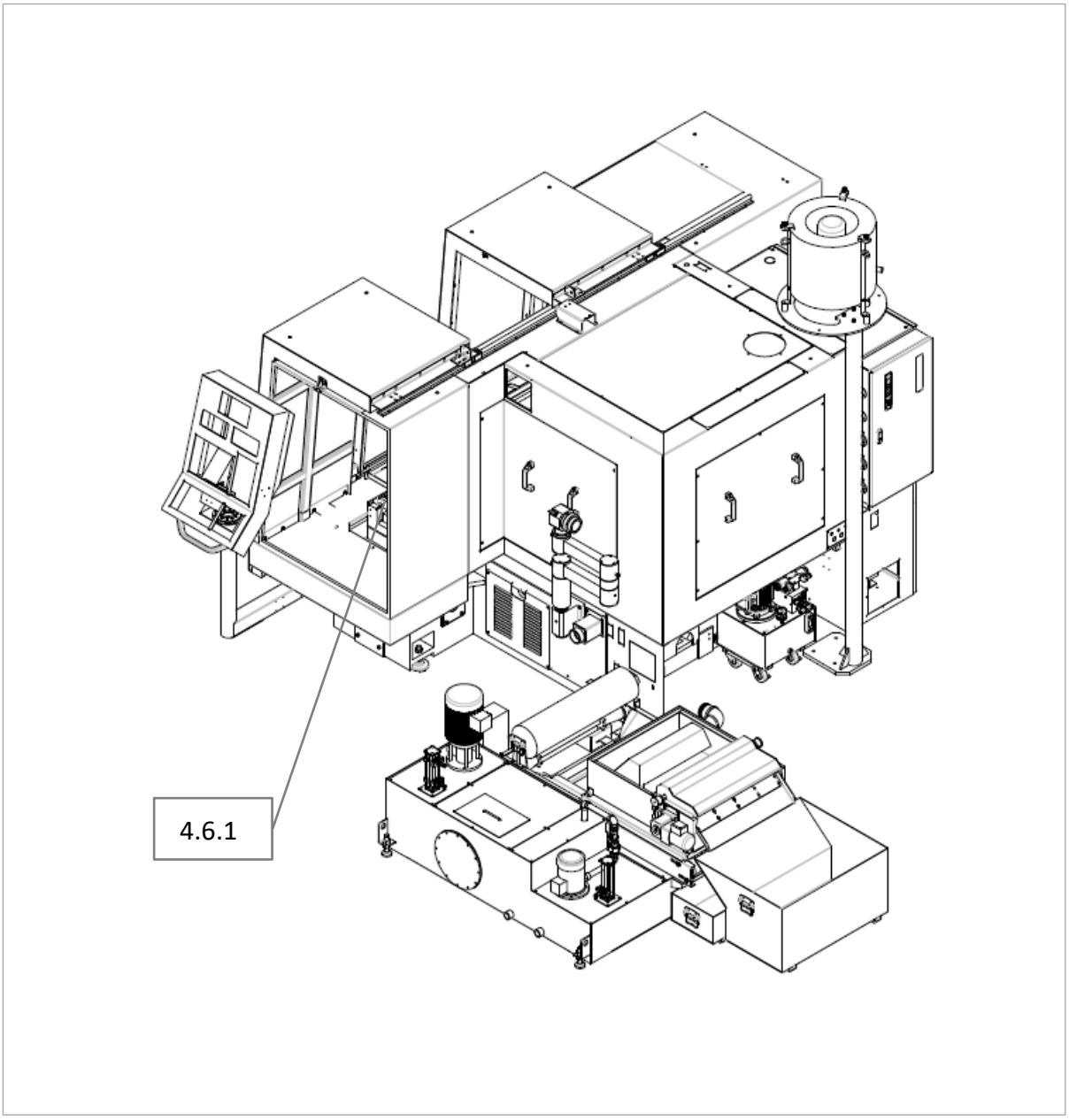

4.6.1 Check guide rails and ball screws protection

The guide rails of the X and Z-axes are protected by organ-type protective covers. The organ-type protective cover is made of nylon cloth and supported by PVC board. It is resistant to oil and corrosion, and has smooth walking. It has protective effect on the machine guide rail.
After a period of use, the protective cover may be damaged due to natural wear, accidental damage, etc., leaking the grinding fluid into the guide rail lubrication system, resulting in more serious machine damage. So it must be checked regularly

The steps are as follows:

- Check the Lubricating oil tank viewing mirror(1) to see if any grinding fluid is mixed with the lubricant.
- Check the organ bellows protective covers (2) on both the X and Z axes to see if the surface is damaged.

If the rail cover is found to be damaged, it needs to be replaced.

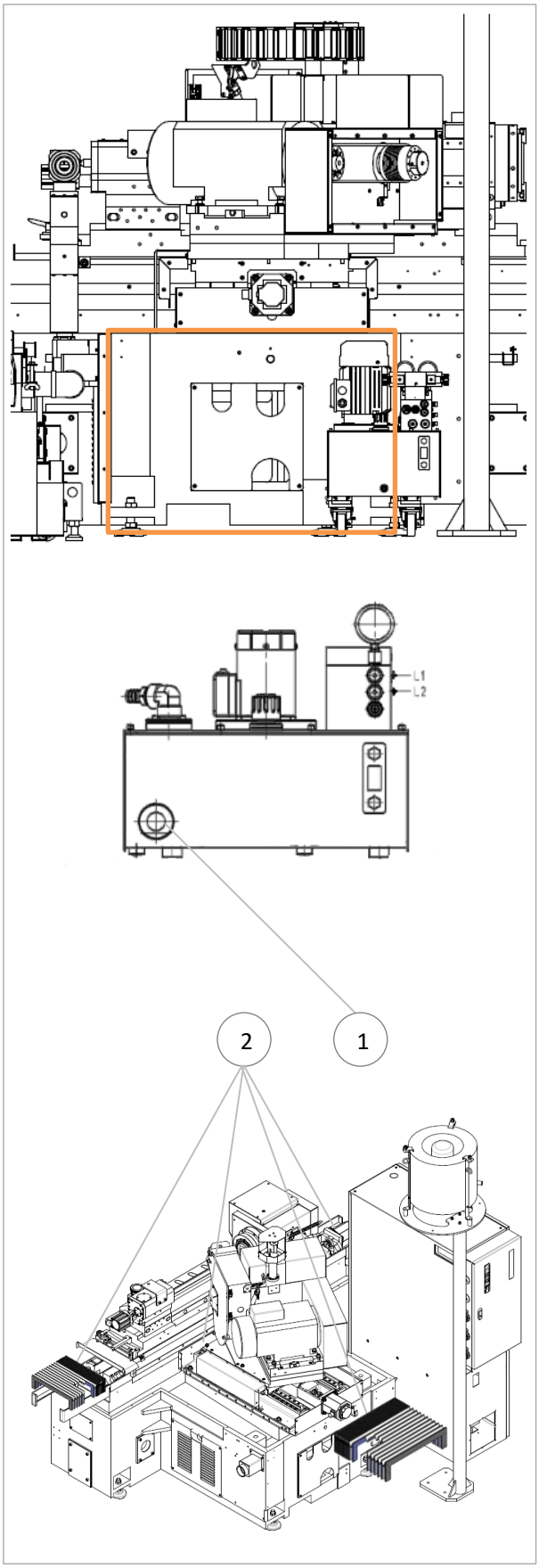

4.6.2 Replace the guide rail cover

4.6.2.1 Replace the Z-axis guide rail cover

Procedure:

- Remove the metal plate on the cover
- Remove the fixing screw of cover
- Remove the cover
- Clear the sealant on mounting surface
- Replace with a new cover and apply sealant (loctite SI5910)
- Tighten the fixing screw
- Install the metal plate

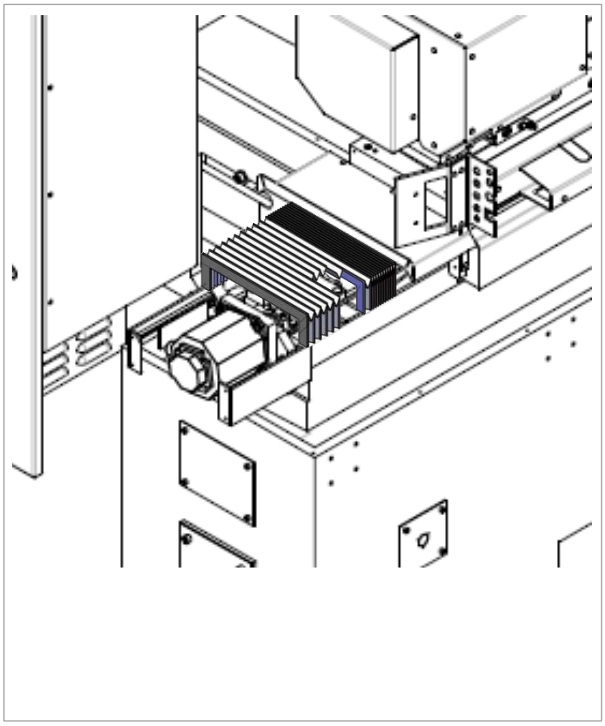

4.6.2.2 Replace the X-axis guide rail cover

P rocedure:

- Remove the X-axis front water retaining rubber
- Remove the fixing screws of the cover and the X-axis slide
- Open the outer cover and remove the inner cover fixing screw
- Remove the front side fixing screws of the outer cover
- Remove the front side fixing screws of the outer cover
- Replace with new covers, install the inner cover on the outer cover first.
- Two covers are fitted together, fixing the front side fixing screws first.
- First lock the inner cover with a sealant (loctite SI5910)
- Then lock the outer cover with a sealant (loctite SI5910)
- Install the water retaining rubber
- Remove the fixing screws of the x-axis rear cover and take out the cover
- Replace with a new cover and apply sealant (loctite SI5910)
- Note:The machine should stop 24H after replacing the cover, in order to wait for the sealant to dry.

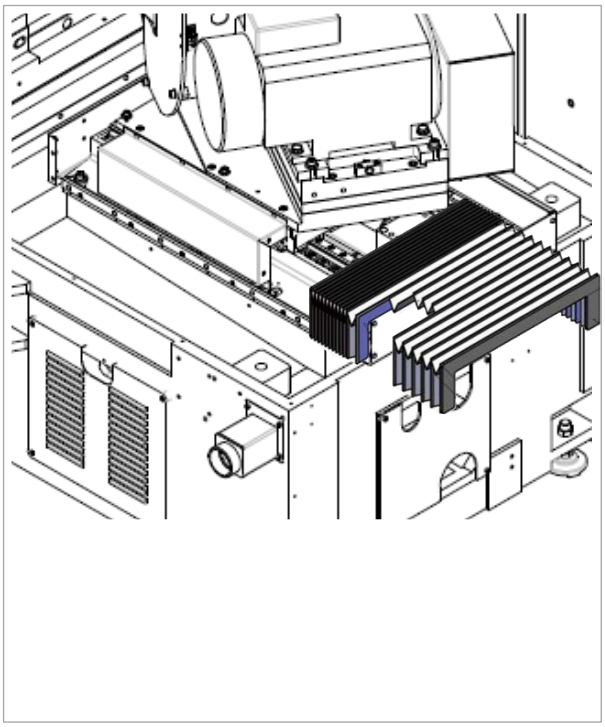

4.7 Maintenance after 2000 hours of operation

The following maintenance procedures must be performed every 2000 working hours.
View the specific operation flow according to the section identified in the figure below.

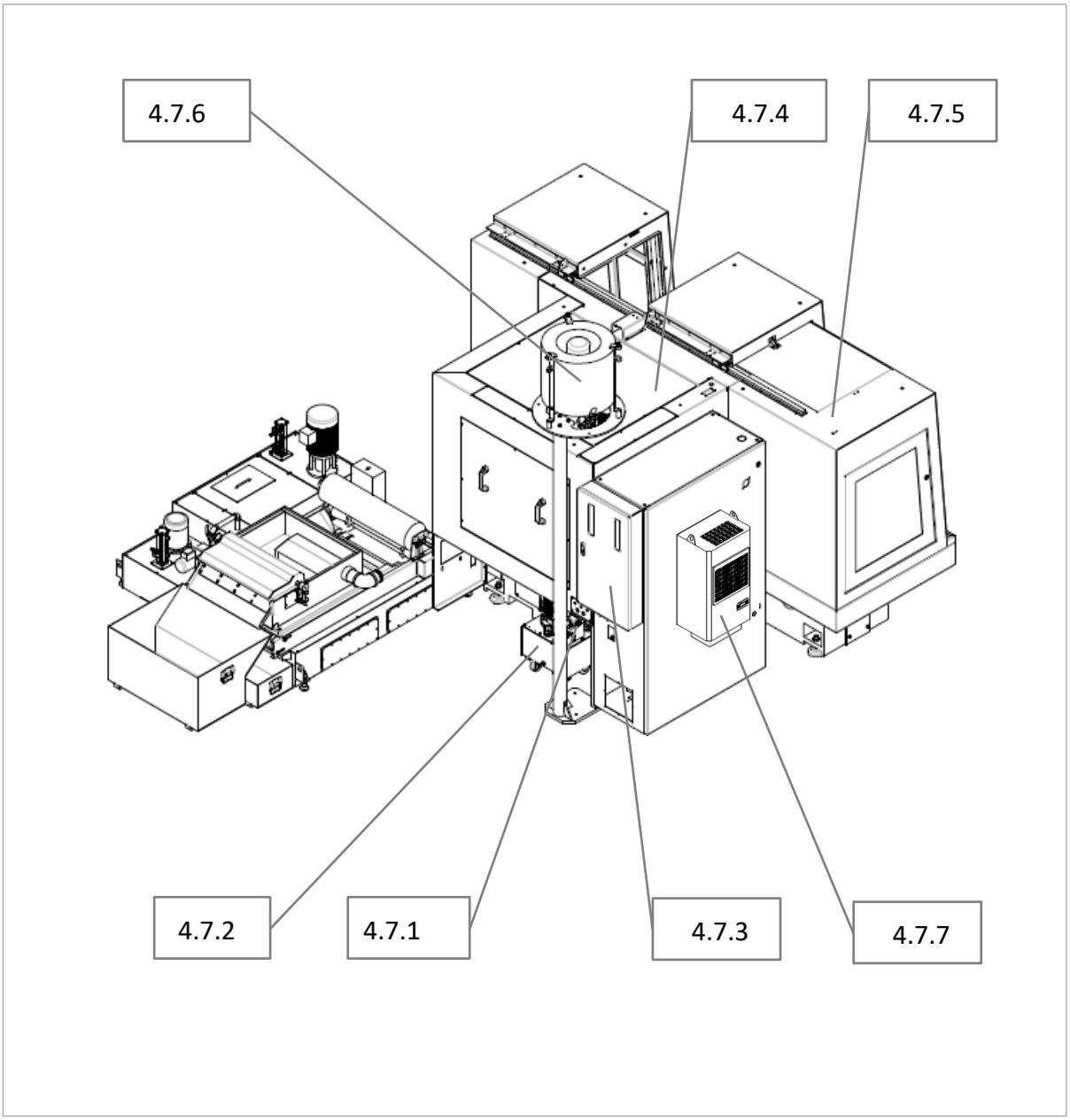

4.7.1 Replace lubricant filter cartridge(s)

Procedure:

- Remove the top cover (1)
- Take out the filter cartridge
- Cleaning orifice
- Replace with a new filter cartridge
- Fix the cover

Caution!
The machine must be stationary and switched off

4.7.2 Replace lubricant

Procedure :

- Shut down for 2 hours, waiting for oil to return
- Open the oil drain (4)
- Wait to drain the old oil and then empty the tank (5)
- Unscrew the tank cap (2)
- Fill new oil into the tank
- Observe the oil level by the level gauge (3)
- Tighten the tank cap after filling

Danger!
Check the hydraulic circuit to confirm that there is no pressure

Oil trademark and specification

	Unit	Capacity
Oil trademark	Shell Tonna S3 M32	
Maximum capacity	Litre	20

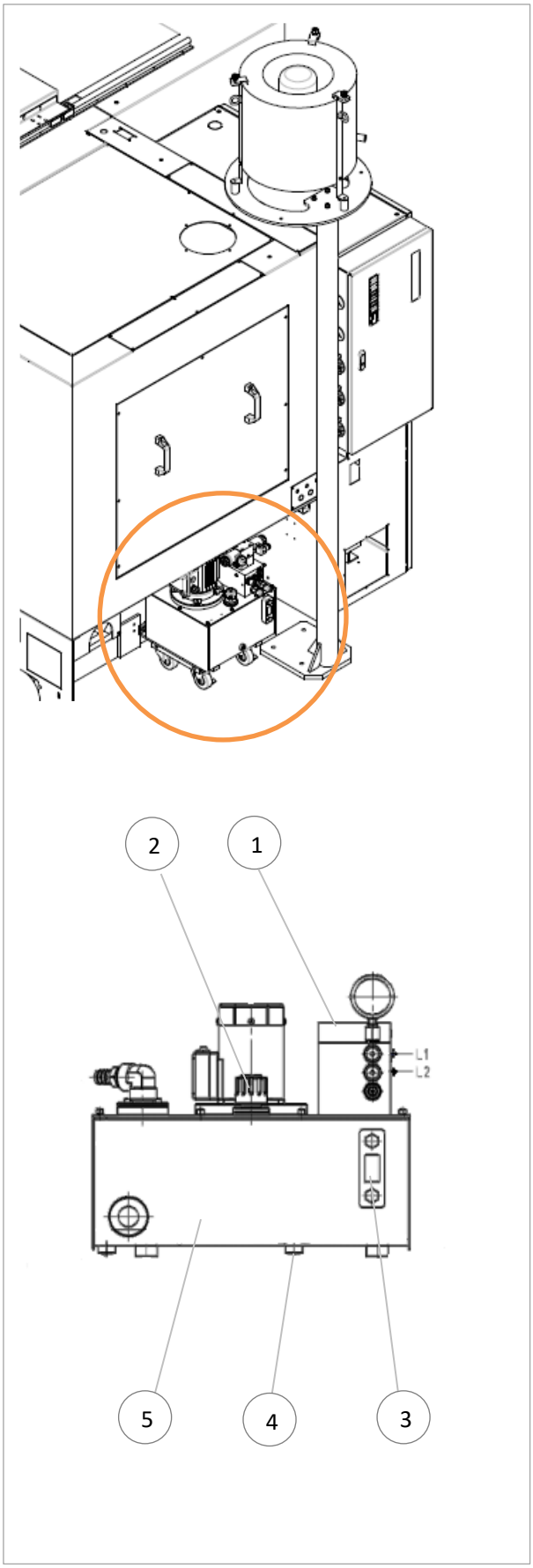

4.7.3 Replace the linear scale filter

Procedure :

- Turn off the machine's pneumatic system
- Unscrew the cover (2) of filter (1)
- Remove the filter cartridge (3)
- Clean the filter cover (2)
- Install a new filter cartridge (3)

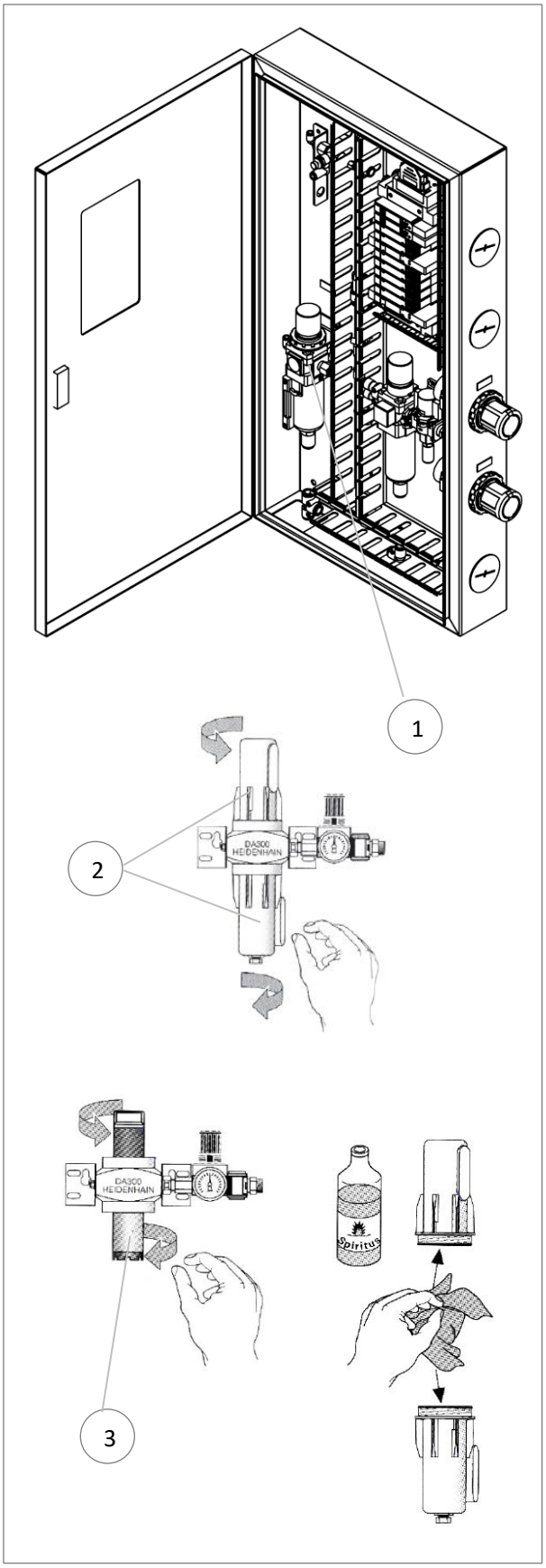

4.7.4 Replace the grinding spindle belt

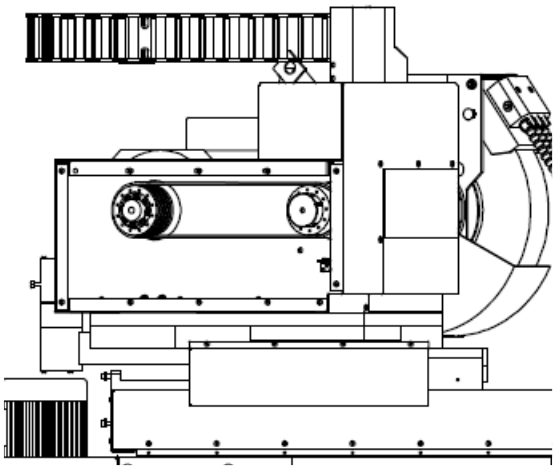

Procedure :

- Turn off the machine
- Remove the cover of pulley box
- Loosen the 4 fixing screws of the spindle motor plate
- Adjust the flange screw, push the motor plate inward to release the tension in the belt
- Replace belt (1)
- Turn the flange bolts (2) to tension the belt to 55Hz~65Hz
- Tighten the clamping bolt of motor plate to 80Nm
- Install the cover of pulley box

Caution!
The machine must be stationary and switched off

4.7.5 Replace the workpiece spindle belt

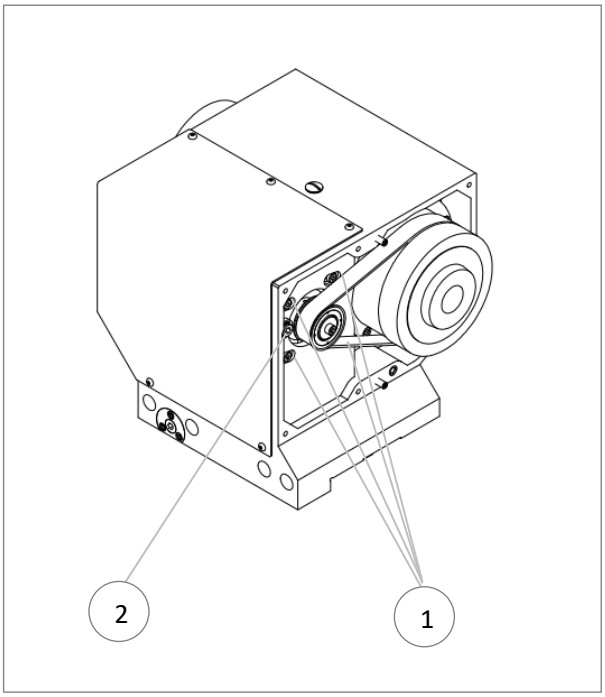

Procedure:

- Remove the front cover of the headstock
- Loosen the four fixing screws (1) of the motor plate
- Rotate the adjustment shaft (2) with a wrench to loosen the belt and remove it, and replace it with a new belt.
- Tension the belt to 75Hz-85Hz by rotating the adjustment shaft.
- Tighten the four fixing screws of motor plate to 70um
- Install the front cover of the workhead
- Use a 0.05mm feeler gauge to make a circle between the front cover and the spindle without interference

4.7.6 Cleaning the air conditioning filter of electric cabinet

The main function of the electric cabinet air conditioner is to take away the heat generated by the electrical components, which provides an ideal temperature and humidity environment for all kinds of cabinets. At the same time, it isolates the dust and corrosive gases in the external environment and extend the service life of electrical components, and improve the reliability of machine system operation.

The air conditioning filter of the electric cabinet needs to be cleaned regularly, otherwise it will affect the performance of the air conditioner.

Procedure:

- Switch off the machine (1)
- Push the filter cover (2) up to remove it

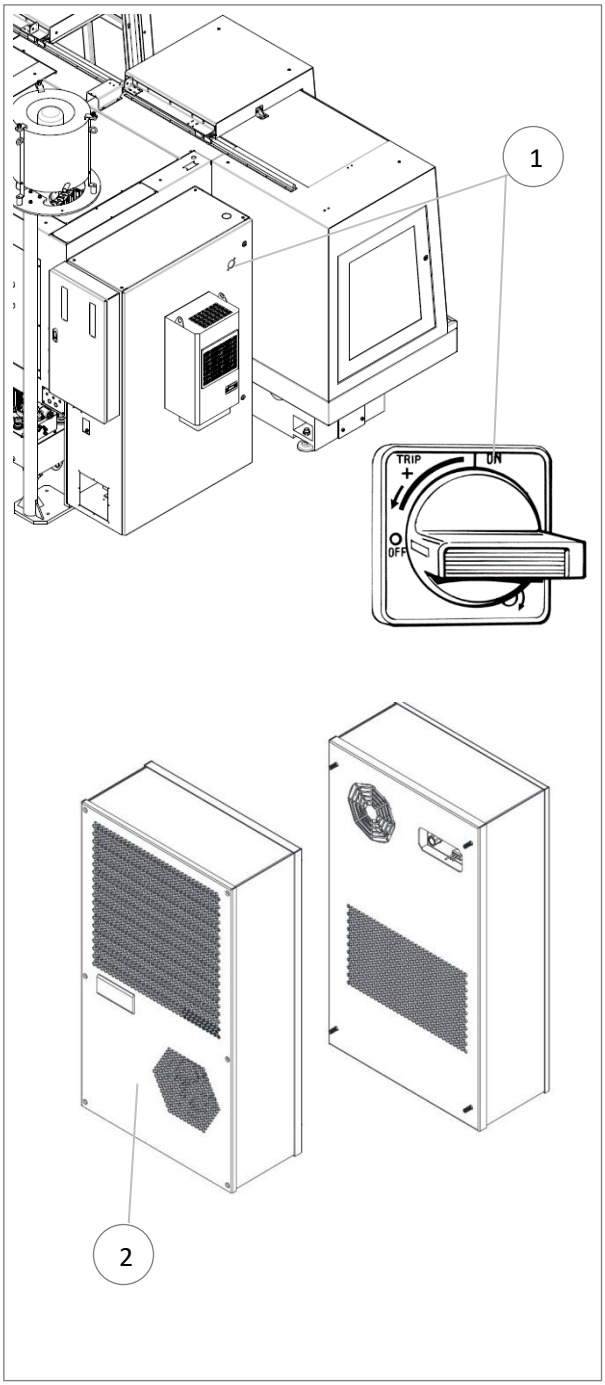

4.7.7 Check machine level accuracy

Procedure :
Adjustment of the level accuracy of the machine is done by means of load-bearing bolts and steel washers, which are between the bolts and the concrete foundation. Using a precision spirit level (1) placed on the machine table, check the level in both longitudinal and transverse directions as follows:

- Shut down the machine tool;
- Clean the surfaces and place levels in the center of the table on each of the X and Z directions;
- Make levelling adjustment: X direction 0.02mm/m, Z direction 0.01mm/m. If it is in the range, no adjustment is needed. Please adjust according to the following steps If it is out of range;
- **Steps**:
- Remove the pressure plates at 5, 6 and 7, adjust the bolts at 1, 2, 3 and 4 to adjust the level of X direction to 0.02 mm/m;
- Z direction is in the range of 0.01 mm/m;
- Move the Z axis to ensure that the left limit position, the middle position and the right limit position level remain within the range;
- Move the Z axis in the middle position and support the bolts at 5, 6 and 7 to ensure the level is unchanged;
- Tighten the clamping nut to ensure the level is unchanged;
- Move Z-axis and check the level is within range. Turn off the machine;
- Push the filter cover (1) up to remove it

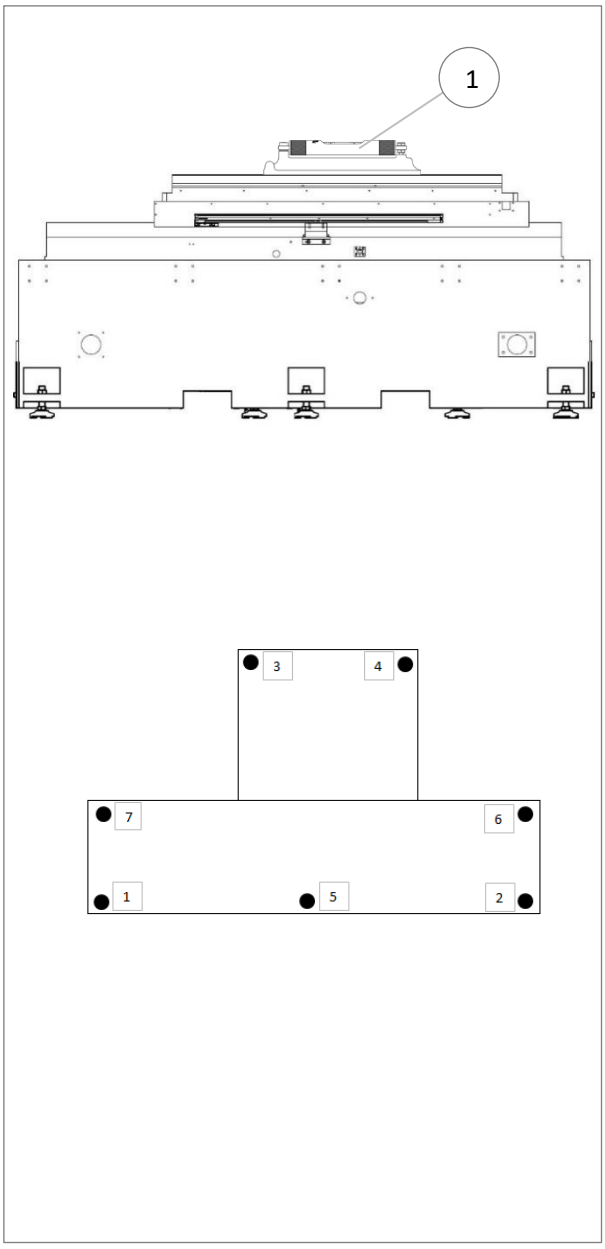

4.8 Various procedures

4.8.1 Use of the diagnostic

This section describes access to machine tool PMC diagnostics, as well as a variety of other possibilities

Procedure:

- From any page, press key "SYSTEM" (1).
- Press the extension button "+" (2) several times to find "PMC MAINTE"
- Press "PMC MAINTE", then find "STATUS" (3), press the "STATUS" button to monitor the signal status.

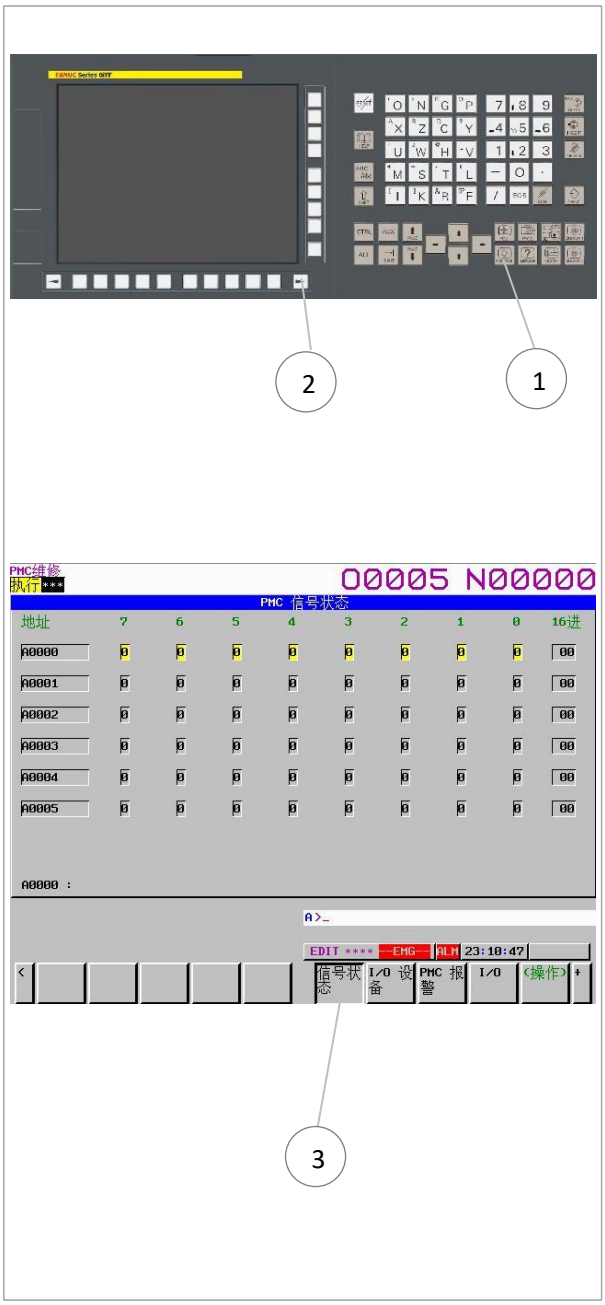

4.8.2 NC programmes update

The machine programme update is made with a memory flash card containing the new version of those.

Procedure:

- Place the machine main switch (1) to ON position "|".
- Press and maintain the two "soft keys" (2) located at the bottom right of the screen and switch on the control by pressing the push button (3).
  - The screen will display page "SYSTEM MONITOR MAIN MENU".
- Open the small flap door (4) situated on the screen left hand side and introduce the memory card.
- Use the function keys "UP" and "DOWN" to select line "1. SYSTEM DATA LOADING" then press the "SELECT" key.
- - The screen will display the directory of the files available on the memory card
- Use the keys "UP" and "DOWN" to select file"PD1T10M.00", or the file specified on the card, then press "SELECT" key.
  - The screen will display message "LOADING OK ? HIT YES OR NO".
- Press "YES" key to confirm the procedure (or "NO" to abandon the procedure).
  - The programme will copy the selected memory card files in the NC.
- Use the soft keys "UP" and "DOWN" to select the line "END", then press "SELECT" soft key to exit and return to main menu "SYSTEM MONITOR MAIN MENU".
- Use the soft keys "UP" and "DOWN" to select the line "END", then press soft key "SELECT".
  - The screen will display a confirmatory message
- Press soft key "YES" to confirm exit and return to main HARDINGE menu page.
- Remove the memory card and close the flap door.

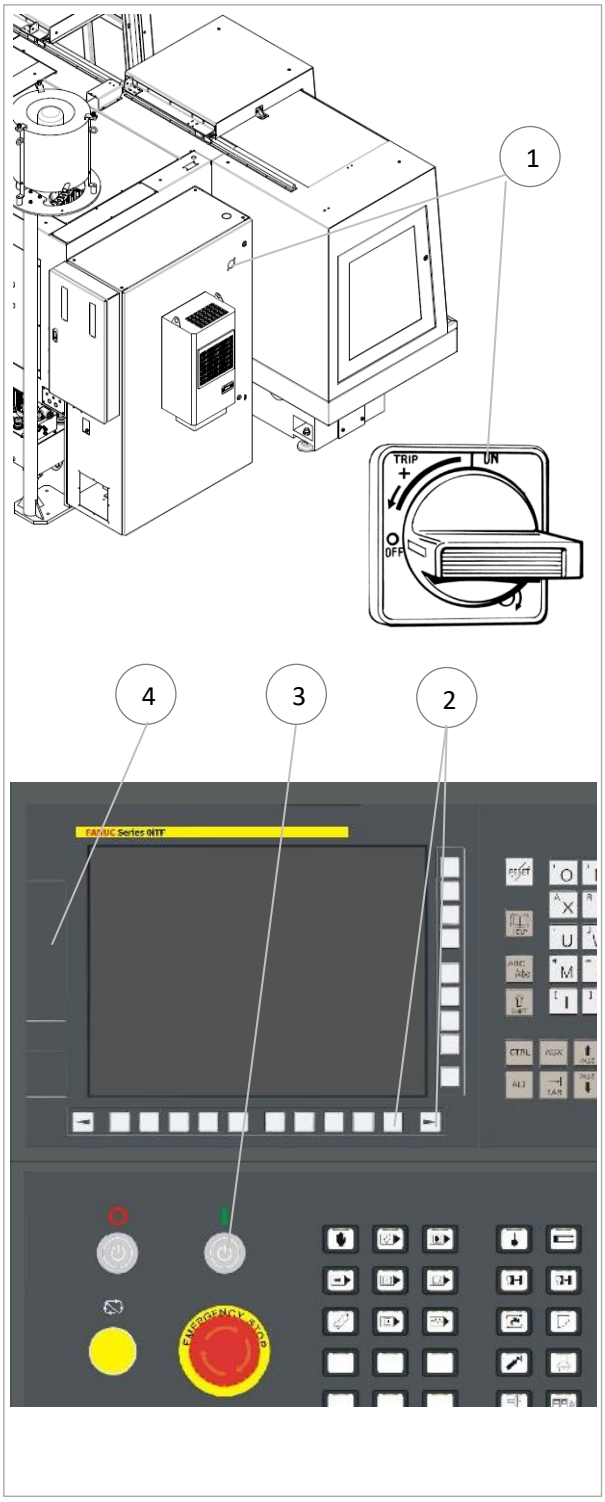

4.8.3 NCprogrammes restore

This procedure permits to restore the original NC programmes stored in a memory card.

Material: The machine programmes restore must be effected with the help of a SRAM memory card, PMC CIA, containing these programmes (supplied with the control).

Procedure:

- Place the machine main switch to on position “|” (the control is "OFF").
- Press and maintain the two "soft keys" (2) located at the bottom right of the screen and switch on the control by pressing the push button (3).
  - The screen will display page "SYSTEM MONITOR MAIN MENU".
- Open the small flap door (4) situated on the screen left hand side and introduce the memory card.
- Use the "UP" and "DOWN" soft keys to select line: "5.SRAM DATA BACKUP", then press "SELECT" key.
  - The screen will display a new menu.
- Use the "UP" and "DOWN" soft keys to select the line "2. RESTORE SRAM (MEMORY CARD -> CNC", then press softkey "SELECT".
  - The screen will display a confirmatory message
  Important: Do not use any other command from this menu (1.SRAM BACKUP CNC -> MEMORY CARD).
- Press soft key "YES" to confirm (or "NO" to abandon the procedure).
  - The programme will copy the selected memory card files in the NC.
- Use the soft keys "UP" and "DOWN" to select the line "END", then press "SELECT" soft key to exit and return to main menu "SYSTEM MONITOR MAIN MENU".
- Use the "UP" and "DOWN" softkeys to select the line "END" and press the softkey "SELECT"
  - The screen will display a confirmatory message
- Press soft key "YES" to confirm exit and return to main HARDINGE menu page.
- Remove the memory card and close the flap door.

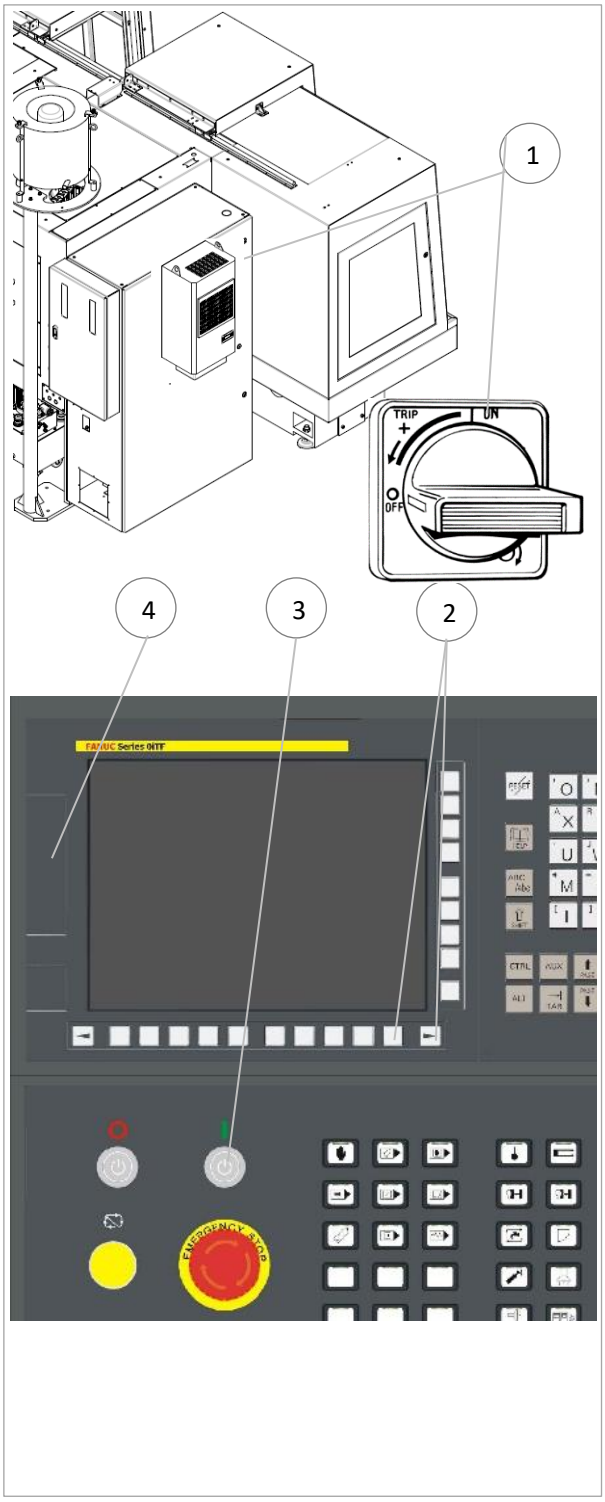

4.8.4 Replacement of the battery

The programme stored in the control memory is retained after the machine is switched off by a lithium battery. The lithium battery case is mounted on the FANUC power control board.

Attention!
This battery must be replaced once every 5 years
(Supplier: FANUC)

Important!
The machine must be powered during battery replacement (main power switch (1) is at "|" and the control button (2) has been pressed).
Changing the battery when the machine is not powered up will result in the loss of all stored parameters.

The following parameters are stored in the memory:
- CNC parameters
- ISO programmes for recall of macros (09999 - 09990);
- HARDINGE parameters

Attention!
Please contact the HARDINGE after sales department should these data been lost.

Procedure:

- Place the machine main switch to ON position "|" and press the control push button (2).

Attention!
The screen must be activated.

- Open the rear door of the control console.
- Disconnect the plug of the old lithium battery and replace it with the new assembly.
- Close the console rear door.

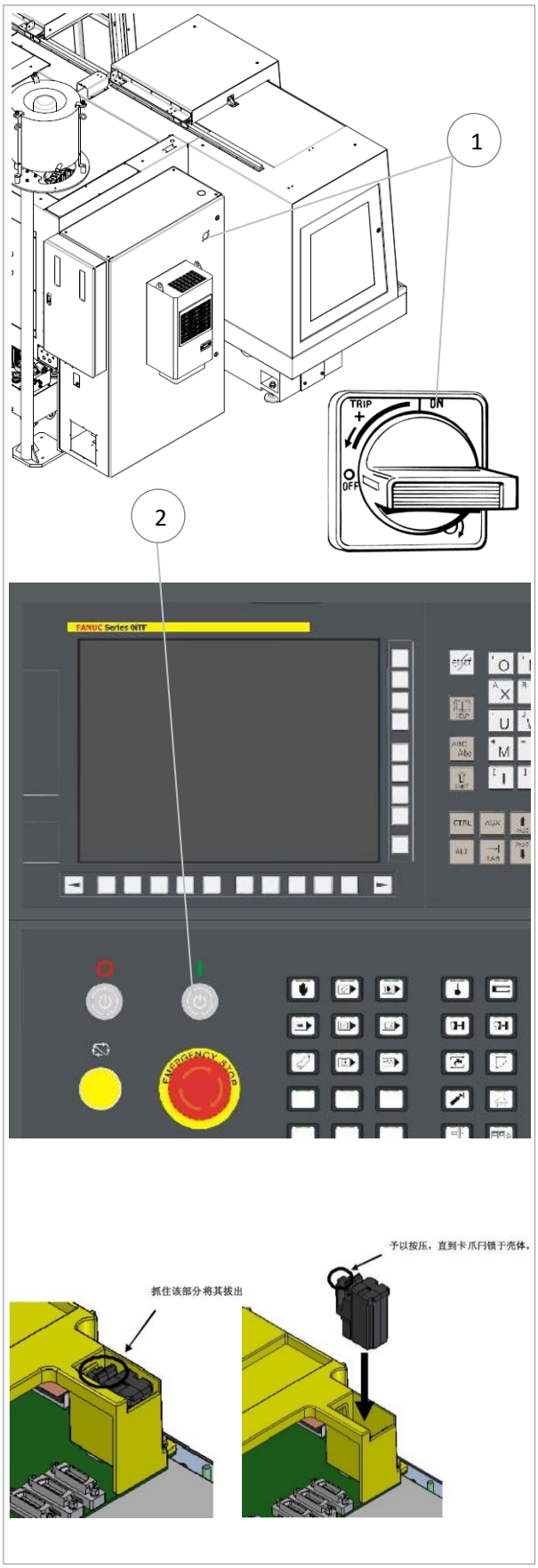

4.9 Trouble shooting

4.9.1 Warning and alarm messages

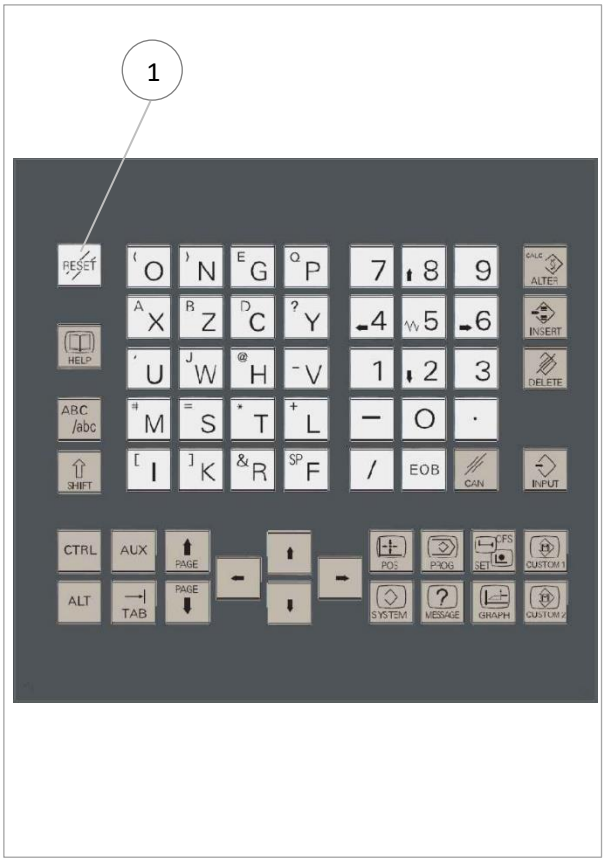

If a problem occurs during normal use of the machine,the programme will inform the operator by displaying three types of warnings:

Warning messages
The system will display on top of the screen:
(OPERATOR MESSAGE)

These will appear directly on the screen (MXX) and will automatically be acknowledged by their function.

The ALARMS (PLC)
The system will display on top of the screen:
(OPERATOR MESSAGE)

They appear on the screen (AXX) and must be acknowledged(after clearing the fault) by pressing the "RESET" (1) key.

Attention: Alarms A33, A34, A35, A36 and A44 will not be displayed on the screen, but the push button (2) will flash. It is then necessary to depress it to display the alarm text on the screen.

The ALARMS (CN)
The system will display on top of the screen:
(OPERATOR MESSAGE)

These alarms concern the control (motors, drivers, etc.)
They are showing on the screen (XXX) and must be acknowledged (after clearing the fault) by pressing the "RESET" (1) key.

Important!
If a problem cannot be solved, it is very important to take note and write down the following information before contacting HARDINGE or its representative:

- Write down completely the text appearing on the screen, as well as its identification number.
- Note the type as well as the machine serial number (3).

4.9.2 Warning messages

Warning messages	
Alarm No.	Description
2000	Machine guard door open
2001	Operator guard door not locked
2002	Operator door was closed
2003	Filtermist delayed off
2005	Mist extractor not running
2018	Probe on and off switch
2021	Probe on
2022	Component unclamped
2034	Cycle start inhibit
2038	Wheelguard 3 open
2039	Wheelguard 4 open
2050	Pre-lubrication active
2051	Spindle warm-up cycle active
2053	Enable gap elimination
2056	Tailstock back
2057	Workhead at mimimum speed
2067	Coolant filter paper low
2069	Feedrate override is cancelled
2070	Close door for internal spindle
2071	Rotary dresser error
2072	Wheel not at speed
2073	Dry run mode
2074	Wheel not running
2077	Dress arm active
2078	Unsafe to move dresser arm, move x back
2079	Dresser not at speed
2080	Any enclosure door open
2082	Flag gauge not forward
2084	Flag overrange
2085	Diameter gauge 2 not forward
2086	Gauging forward
2090	Wheel balance cycle in operation
2094	Feedhold enabled
2095	Chuck not active
2096	Test machine emergency stop
2097	Release machine emergency stop
2098	Test mhop emergency stop

2099	Release mhop emergency stop
2103	Please open gaurd door
2105	Lubrication tank charging
2107	Wheel guard open
2108	Workhead not running
2110	Dresser arm not up
2111	Dresser arm not down
2112	Tailstock not tight, end drive tighten inhibit
2113	Please operate after closing the door or use hold key switch after confirming safety
2114	End drive not return,tailstock back inhibit
2115	Do not meet operational requirements, door open and workpiece spindle stop
2116	Program not reset,operation inhibit
2117	Hold key switch active, be careful during operating!!!
2118	Tailstock forward/reverse timeout
2119	End drive forward/backward timeout
2123	Tailstock not tight
2127	Water tank sedimentation zone level low!
2128	No workpiece outside the machine!
2130	Auto tray is full!
2131	Auto loading area is short of material!
2132	The robot is in the work area or automation is not powered!

4.9.3 Alarm messages

Warning messages	
Alarm No.	Description
1004	Oil mist collector overload
1006	Lube error - fuse blown
1007	Lube pressure fault
1008	Lube level low
1009	Electrical cabinet temperature fault
1010	Air pressure fault
1011	Amplifier supply fault
1012	B axis unclamp error
1013	B axis not clamped
1014	B axis has lost clamp
1015	Hirth coupling off error
1016	Hirth coupling on fault
1017	Not in position to apply hirth coupling
1019	Probe not on flag
1020	Probe not off flag
1023	Component clamp not safe
1024	Component not clamped
1025	Component clamp has lost clamp signal
1026	Tailstock not back
1027	Tailstock not forward
1028	Coolant flow not okay
1029	Dresser on and off error
1030	Dresser not fitted but position shown error
1031	Dresser not in safe position
1032	Dresser not on
1033	Dresser not off
1035	Workhead speed request too fast
1036	Machine rear door open
1037	Machine side door open
1040	Wheel 1 internal lube air pressure fault
1041	Wheel 2 internal lube air pressure fault
1042	Wheel 3 internal lube air pressure fault
1043	Wheel 4 internal lube air pressure fault
1044	Wheel 1 internal temperature coolant fault
1045	Wheel 2 internal temperature coolant fault
1046	Wheel 3 internal temperature coolant fault
1047	Wheel 4 internal temperature coolant fault

1048	Internal lubrication unit fault
1049	Internal coolant unit fault
1052	Hydraulic fan fuse blown
1054	A gap elimination sensor is faulty
1055	Not all axis are homed
1058	Coolant pump overload tripped
1059	Coolant scavenge pump overload tripped
1060	Grinding wheel flushing pump overload
1061	Coolant filter paper motor overload tripped
1062	Coolant magna drum overload tripped
1063	Coolant chiller overload tripped
1064	Coolant temperature fault
1065	Coolant level too high (scavenge)
1066	Coolant level low
1068	Group 1 solenoid fault
1075	Wheel inverter/overload fault
1076	Wheel select error
1081	Diameter gauge 1 not forward
1083	Guage control not in auto mode
1087	Wheel visor not closed
1088	Wheel visor not open
1089	Visor signal error
1091	Wheel balance alarm
1092	Current surge arrester faul
1093	CNC SRAM battery low
1100	MHOP communication fault
1101	MHOP LCD display fault
1102	Gaurd door switch fault
1104	Lubrication level fault
1106	Machine in E-stop
1109	Hydraulic pump motor fault
1120	Dressing fuse blown
1121	Dressing chiller fault
1122	Grinding spindle fan or drive air circuit breaker trip!
1124	Air sealing detection alarm
1125	Emergency back has started!！！！
1129	Gauge not back in place!

4.9.4 D parameters

D0.1	=0	Auto door not active
	=1	Auto door active
D0.2	=0	Double auto door not active
	=1	Double auto door active
D1.0	=0	Workhead override 100%
	=1	Workhead override can be controlled
D1.2	=0	Diameter gauge 1 not active
	=1	Diameter gauge 1 active
D1.3	=0	End gauge not active
	=1	End gauge active
D1.4	=0	Diameter gauge 2 not active
	=1	Diameter gauge 2 active
D1.5	=0	Wheel balance alarm not active
	=1	Wheel balance alarm active
D1.6	=0	Door open and do not need a key switch to control diameter gauge manually
	=1	Door open and need a key switch to control diameter gauge manually
D1.7	=0	Skip signal active when X5.3=0
	=1	Skip signal active when X5.3=1
D2.0	=0	Alarm invalid tailstock forward and backward in place
	=1	Alarm valid tailstock forward and backward in place
D2.1	=0	The first soft limit is valid
	=1	The second soft limit is valid
D2.7	=0	Invalid taper correction feed
	=1	valid taper correction feed
D3.0	=0	Invalid measuring arm
	=1	Valid measuring arm
D3.4	=0	Dresser not active
	=1	Dresser active
D3.5	=0	Dressing chiller solenoid valve not active
	=1	Dressing chiller solenoid valve active
D4.0	=0	Tailstock advance in place alarm invalid
	=1	Tailstock advance in place alarm valid
D4.4	=0	Foot pedal control tailstock forward and backward in place alarm invalid
	=1	Foot pedal control tailstock forward and backward in place alarm invalid
D4.5	=0	Manual sleeve retraction
	=1	Automatic sleeve retraction
D6.0	=0	DACH1 invalid
	=1	DACH1 valid

D7.0	=0	Grinding wheel flushing pump overload alarm active
	=1	Grinding wheel flushing pump overload alarm not active
D7.1	=0	220V chiller fault alarm active
	=1	220V chiller fault alarm not active
D7.2	=0	Magnetic separator trip alarm active
	=1	Magnetic separator trip alarm not active
D7.3	=0	Cooling tank level not active
	=1	Cooling tank level active
D7.7	=0	Front door lock not shielded
	=1	Front door lock shield
D8.0	=0	The program number is fixed to O0001
	=1	The program number is optional
D8.1	=0	Automatic feed-back detection signal invalid
	=1	Automatic feed-back detection signal valid
D8.2	=0	Enables hold connection when the workpiece spindle is stopped
	=1	Enables disconnection when the workpiece spindle is stopped
D8.4	=0	The robot can not open the door when it is not at the home position
	=1	The robot can open the door when it is not at the home position
D8.5	=0	Not in magnetic pole detection state
	=1	Magnetic pole detection trigger, please confirm D8.6=1
D8.6	=0	B-axis normal
	=1	B-axis always relaxed
D8.7	=0	Auto alarms shield
	=1	Auto alarms valid
D9.0	=0	Auto wheel balance M54 code valid
	=1	Auto wheel balance M54 code shield
D9.1	=0	Robot in the work area,axis move inhibit
	=1	Robot in the work area, axis can move
D9.2	=0	Feeder not active
	=1	Feeder active
D9.3	=0	Side and rear door switches active
	=1	Side and rear door switches not active
D9.4	=0	Fully auto balancing is balanced if not at the target value
	=1	Fully auto balancing is balanced when the tolerance value is exceeded
D9.5	=0	Lifting pump works by level gauge
	=1	Lift pump continues to work
D9.6	=0	Waiting location switch of diameter gauge forward and backward
	=1	No waiting location switch of diameter gauge forward and backward
D9.7	=0	AE anti-collision function active
	=1	AE anti-collision function not active

D10.0	=0	DRY RUN MODE not active
	=1	DRY RUN MODE active
D10.1	=0	Auto top door not active
	=1	Auto top door active
D10.2	=0	Chuck control not active
	=1	Chuck control active
D10.3	=0	No AE device
	=1	AE device
D11.0	=0	Grinding spindle water cooler alarm valid
	=1	Grinding spindle water cooler alarm invalid
D12.0	=0	Panel back button valid
	=1	Panel back button invalid
D15.6	=0	Gauging devices are not MARPOSS P7
	=1	Gauging devices are MARPOSS P7
D15.7	=0	Automatic door opens when program end
	=1	Automatic door does not opens when program end
D18.0	=0	WHEEL 1 & 2 COJOINED VISORS
	=1	WHEEL 1 & 2 COJOINED VISORS
D19.0	=0	Dressing line connection signal active
	=1	Dressing line connection signal not active
D19.1	=0	Auto door does not close automatically when started by program
	=1	Auto door closes automatically when started by program
D19.2	=0	After emergency stop button is pulled up, flushing pump starts working.
	=1	Flushing water starts together with cooling water
D20.1	=0	Wheelguard not closed alarm not active
	=1	Wheelguard closed alarm active
D20.5	=0	Light load parameters
	=1	Overload parameters

4.9.5 M code parameters

M00	M00 program stop
M01	M01 Optional program stop
M03	Workpiece spindle forward
M04	Workpiece spindle reversal
M05	Work spindle stop
M07	Replacement data transmission active
M08	Main coolant on
M09	Main coolant off
M13	Grinding wheel spindle rotation
M15	Grinding wheel spindle stop
M22	Enable gap elimination
M23	Disable gap elimination
M24	Enable diameter gauge head 1
M25	Disable diameter gauge head 1
M28	Enable end gauge
M29	Disable end gauge
M30	End of M30 program
M39	Diameter gauge return zero
M40	End gauge return zero
M46	Auto door open
M47	Auto door close
M48	Feedrate override enabled
M49	Feedrate override disabled
M50	Grinding wheel guard close
M51	Grinding wheel guard open
M54	Auto grinding wheel balance
M56	Auto top door open
M57	Auto top door close
M60	Enable daimeter head 2
M61	Disable daimeter head 2
M62	Enable dressing gap elimination
M63	Disable dressing gap elimination
M70	Robot replacement program call
M71	Robot pick-up program call
M72	Robot replacement start
M73	Robot pick-up start
M100	Tailstock end drive sequence action restriction not active
M101	Tailstock end drive sequence action restriction active
M103	Dresser start

M105	Dresser stop
M108	Dressing cooling start
M109	Dressing cooling stop
M111	Tailstock tight
M112	Tailstock not tight
M113	Outside centre tight
M114	Outside centre not tight
M116	Outside end gauge open
M117	Outside end gauge colse
M118	Outside end gauge extend
M119	Outside end gauge retract
M120	Outside measurement start
M121	Workhead fixture clamp
M122	Workhead fixture unclamp
M123	Measurement data reading
M127	Workpiece count
G31 P4	Diameter meter coarse grinding in place signal
G31 P1	Diameter meter fine grinding in place signal
G31 P2	Diameter meter polishing in place signal